Model 873
COMBINE ADAPTER

For 963, 972, 973 & 974 Headers on:

- Case Combines
- New Holland Combines
- John Deere Combines
- Lexion Combines
- Agco Combines

OPERATOR'S MANUAL

Form 147069 Issue 09/06

Sugg. Retail: $10.00

Inside Front Cover
(blank)

INTRODUCTION

This Manual contains information on the adapter which is required to allow attachment of the MacDon Model 963, 972, 973 and 974 Headers to various models of combines.

NOTE: This supplement does not provide all the information required to operate the header. It must be used in conjunction with your Header and Combine Operator's Manuals.

CAREFULLY READ ALL MANUALS TO BECOME FAMILIAR WITH RECOMMENDED PROCEDURES BEFORE ATTEMPTING TO UNLOAD, ASSEMBLE OR USE THE MACHINE.

This manual is divided into sections on: Safety, Attaching and Detaching the Header, Operation and Maintenance/Service. In addition, Assembly and Adapter Mounting Instructions for each type of combine are found at the back of this book.

Use the Table of Contents and the Index to guide you to specific areas. Study the Table of Contents to familiarize yourself with how the material is organized.

Keep this manual handy for frequent reference and to pass on to new operators or owners. Call your dealer if you need assistance, information or additional copies of the manual.

NOTE: Right hand (R/H) and Left hand (L/H) designations are determined from the operator's position, facing forward.

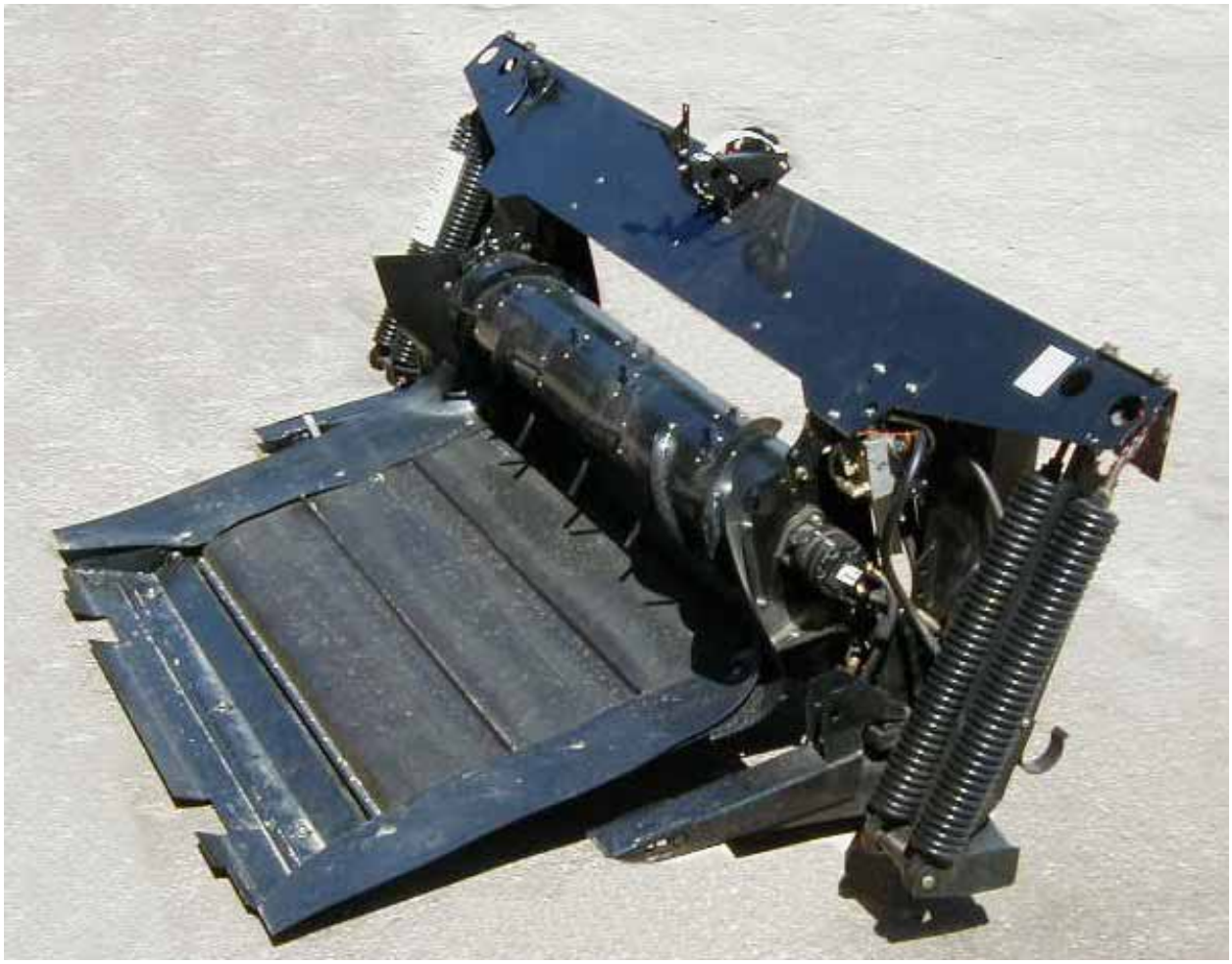

TABLE OF CONTENTS

INTRODUCTION 1
SPECIFICATIONS 3
SERIAL NUMBER LOCATION 3
TORQUE SPECIFICATIONS 4, 5

SAFETY
- Safety Alert Symbol & Signal Words 6
- Safety Signs 7

HEADER ATTACHING & DETACHING
- Attaching Header to Combine and Adapter ..... 8 - 12
- Detaching Header from Combine and Adapter 13, 14
- Detaching Header and Adapter from Combine 15
- Attaching Header and Adapter to Combine 16

OPERATION
- Break-In Period 17
- Draper Speed Control 17
- Header Flotation ..... 18 - 21
- Header Levelling 22
- Header Angle 23
- Widening the Delivery Opening 23
- Windrowing with the Combine (Feed Pan Clearance Adjustment) 24

MAINTENANCE/SERVICE
- Service Procedures 25
- Recommended Lubricants 25
- Enclosed Drive Lubricant Capacities 25
- Sealed Bearing Installation 26
- Greasing the Adapter 26, 27
- Hydraulic System
  - Hydraulic System Safety 28
  - Hoses and Lines 28
  - Hydraulic Schematic 28
  - Hydraulic Oil 29
  - Hydraulic Oil Filter 29
  - Flow Control Relief Pressure 30
- Gearbox Lubrication 31
- Retracting Tine Drum 32
- Maintenance Schedule 33
- Maintenance Record 34

TROUBLESHOOTING ..... 35 - 37
ATTACHMENTS 38

ASSEMBLY
- Preparing the Adapter
  - Float Linkage Set-Up 39, 40
  - Side Deflector Position 41
  - Feed Draper 42
  - Skid/Transition Plate 42, 43
  - Center Link 44
  - Retracting Tine Drum Fingers 44
  - Position Retracting Tine Drum 45, 46
- Preparing the Header ..... 47 - 49
- Adjustments and Checks 50

ADAPTER MOUNTING INSTRUCTIONS
- Case IH 60, 77 & 80 Series ..... 51 - 53
- Case AFX, New Holland CR & CX ..... 54 - 57
- John Deere ..... 58 - 69
- Lexion ..... 70 - 78
- Agco (Gleaner, Massey Ferguson & Challenger) ..... 79 - 87

INDEX 88

SPECIFICATIONS

FEED DRAPER DRIVE	Hydraulic: Pump driven from right side of feeder house, reversible with combine feeder chain
FEED DRAPER SPEED	522 to 652 feet/min. (160 to 195 metres/min.) varies with combine
FEED DRAPER MATERIAL	Self-tracking rubber coated polyester fabric with rubber slats
FEED DRAPER WIDTH:	

John Deere, New Holland CX, Lexion 460, 465, 480, 480R, 485 & 485R, Challenger 670, MF 9790.....55.9” (1420 mm)
Case 77, 80 & 88 Series, Case AFX, New Holland CR 970/980, Challenger 660, MF9690.....45.5” (1155 mm)
Lexion 450, 460R, 470, 470R, 475, 560, 560R, 570R, 575R, 580 & 580R, 585R.....45.5” (1155 mm)
Case 60 & 66 Series, New Holland CR 920/940/960, Gleaner.....38.4” (975 mm)

RETRACTING TINE DRUM DRIVE	Hydraulic: Pump driven from right side of feeder house, reversible with combine feeder chain
RETRACTING TINE DRUM SPEED	146 to 180 RPM, varies with combine
RETRACTING TINE DRUM DIA.	11” (280 mm) with 1-1/4” (32 mm) flighting on ends
HEADER SIDE DRAPER DRIVE	Hydraulic: Pump driven from right side of feeder house
HEADER UPPER CROSS AUGER DRIVE (OPTION):	Hydraulic: Pump driven from right side of feeder house
HEADER SICKLE DRIVE	Mechanical: Driveline from left side of feeder house
HEADER FLOTATION	Raised Frame Position: 7.3 inches (185 mm) vertical and 3.0° lateral Lower Frame Position: 7.5 inches (190 mm) vertical and 4.8° lateral
HEADER REEL DRIVE	Hydraulic from combine oil supply
ADAPTER TO HEADER TOP CENTER LINK:	Mechanical or Hydraulic from combine oil supply, (with solenoid valve to toggle to reel fore-aft/header tilt options, if equipped)

SERIAL NUMBER LOCATION

Record the serial number in the space provided.

873 Combine Adapter: _____

Plate (A) is located on left side of adapter frame.



COMBINE ADAPTER SERIAL PLATE

NOTE: When ordering parts and service, be sure to give your dealer the complete and proper serial number.

TORQUE SPECIFICATIONS

CHECKING BOLT TORQUE

The tables shown below give correct torque values for various bolts and capscrews. Tighten all bolts to the torques specified in chart unless otherwise noted throughout this manual. Check tightness of bolts periodically, using bolt torque chart as a guide. Replace hardware with the same strength bolt.

ENGLISH TORQUE SPECIFICATION

Bolt Dia. "A"	NC Bolt Torque* (For fastening Steel Components)			
	SAE 5		SAE 8	
	N·m	[lb-ft]	N·m	[lb-ft]
1/4"	12	[9]	15	[11]
5/16"	24	[18]	34	[25]
3/8"	43	[32]	56	[41]
7/16"	68	[50]	95	[70]
1/2"	102	[75]	142	[105]
9/16"	149	[110]	202	[149]
5/8"	203	[150]	271	[200]
3/4"	359	[265]	495	[365]
7/8"	569	[420]	813	[600]
1"	867	[640]	1205	[890]

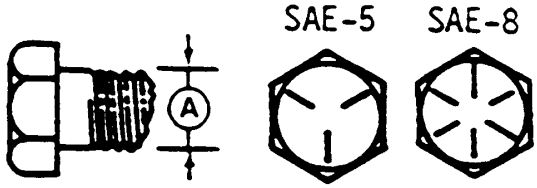

METRIC TORQUE SPECIFICATIONS

Bolt Dia. "A"	Bolt Torque* (For fastening Steel components)				Bolt Torque* (For fastening Aluminum components**)			
	8.8		8.8		8.8		10.9	
	N·m	[lb-ft]	N·m	[lb-ft]	N·m	[lb-ft]	N·m	[lb-ft]
M3	0.5	[.4]	1.8	[1.3]				[1]
M4	3	[2.2]	4.5	[3.3]			4	[2.6]
M5	6	[4]	9	[7]			8	[5.5]
M6	10	[7]	15	[11]	9	[6]	12	[9]
M8	25	[18]	35	[26]	20	[14]	28	[20]
M10	50	[37]	70	[52]	40	[28]	55	[40]
M12	90	[66]	125	[92]	70	[52]	100	[73]
M14	140	[103]	200	[148]				
M16	225	[166]	310	[229]				
M20	435	[321]	610	[450]				
M24	750	[553]	1050	[774]				
M30	1495	[1103]	2100	[1550]				
M36	2600	[1917]	3675	[2710]				

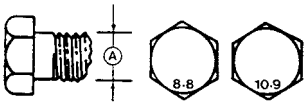

Torque figures indicated above are valid for non-greased or non-oiled threads and heads unless otherwise specified. Do not grease or oil bolts or capscrews unless specified in this manual. When using locking elements, increase torque values by 5%.

* Torque value for bolts and capscrews are identified by their head markings.
** Adapter aluminum components: Pump, gearbox and valve.
NOTE: All poly deflector bolts are torqued to (14 N·m) 120 in-lbs.
Gear pump hardware is torqued to (20 N·m) 14 ft-lbs.

TORQUE SPECIFICATIONS

TIGHTENING O-RING FITTINGS*

1. Inspect O-ring and seat for dirt or obvious defects.
2. On angle fittings, back the lock nut off until washer bottoms out at top of groove.
3. Hand tighten fitting until back-up washer or washer face (if straight fitting) bottoms on face and O-ring is seated.
4. Position angle fittings by unscrewing no more than one turn.
5. Tighten straight fittings to torque shown.
6. Tighten angle fittings to torque shown while holding body of fitting with a wrench.

* The torque values shown are based on lubricated connections as in reassembly.

Thread Size (in.)	Nut Size Across Flats (in.)	Torque Value*		Recommended Turns to Tighten (after finger tightening)	
		N·m	[lb-ft]	Flats	Turns
3/8	1/2	8	[6]	2	1/3
7/16	9/16	12	[9]	2	1/3
1/2	5/8	16	[12]	2	1/3
9/16	11/16	24	[18]	2	1/3
3/4	7/8	46	[34]	2	1/3
7/8	1	62	[46]	1-1/2	1/4
1-1/16	1-1/4	102	[75]	1	1/6
1-3/16	1-3/8	122	[90]	1	1/6
1-5/16	1-1/2	142	[105]	3/4	1/8
1-5/8	1-7/8	190	[140]	3/4	1/8
1-7/8	2-1/8	217	[160]	1/2	1/12

TIGHTENING FLARE TYPE TUBE FITTINGS*

1. Check flare and flare seat for defects that might cause leakage.
2. Align tube with fitting before tightening.
3. Lubricate connection and hand tighten swivel nut until snug.
4. To prevent twisting the tube(s), use two wrenches. Place one wrench on the connector body and with the second, tighten the swivel nut to the torque shown.

* The torque values shown are based on lubricated connections as in reassembly.

Tube Size O.D. (in.)	Nut Size Across Flats (in.)	Torque Value*		Recommended Turns to Tighten (after finger tightening)	
		N·m	[lb-ft]	Flats	Turns
3/16	7/16	8	[6]	1	1/6
1/4	9/16	12	[9]	1	1/6
5/16	5/8	16	[12]	1	1/6
3/8	11/16	24	[18]	1	1/6
1/2	7/8	46	[34]	1	1/6
5/8	1	62	[46]	1	1/6
3/4	1-1/4	102	[75]	3/4	1/8
7/8	1-3/8	122	[90]	3/4	1/8

SAFETY

SAFETY ALERT SYMBOL



This safety alert symbol indicates important safety messages in this manual and on safety signs on the header.

This symbol means:
ATTENTION !
BECOME ALERT !
YOUR SAFETY IS INVOLVED !

Carefully read and follow the safety message accompanying this symbol.

Why is SAFETY important to you?

3 BIG REASONS
- ACCIDENTS DISABLE AND KILL
- ACCIDENTS COST
- ACCIDENTS CAN BE AVOIDED

SIGNAL WORDS

Note the use of the signal words DANGER, WARNING, and CAUTION with safety messages. The appropriate signal word for each message has been selected using the following guidelines:



DANGER – Indicates an imminently hazardous situation that, if not avoided, will result in death or serious injury.



WARNING – Indicates a potentially hazardous situation that, if not avoided, could result in death or serious injury. It is also used to alert against unsafe practices.



CAUTION – Indicates a potentially hazardous situation that, if not avoided, may result in minor or moderate injury. It is also used as a reminder of good safety practices.

SAFETY SIGNS

- The safety signs below appear on the combine adapter.
- Keep safety signs clean and legible at all times
- Replace safety signs that are missing or become illegible.
- If original parts on which a safety sign was installed are replaced, be sure the repair part also bears the current safety sign.
- Safety signs are available from your Dealer Parts Department.

To install safety signs:
1. Be sure the installation area is clean and dry.
2. Decide on the exact location before you remove the decal backing paper.
3. Remove the smaller portion of the split backing paper.
4. Place the sign in position and slowly peel back the remaining paper, smoothing the sign as it is applied.
5. Small air pockets can be smoothed out or pricked with a pin.



Rotating driveline. Contact can cause death. Keep away. Do not operate without:
- All driveline, power unit, and attachment shields in place.
- Driveline securely attached at both ends.
- Driveline shields that turn freely on driveline.



HEADER ATTACHING & DETACHING

ATTACHING HEADER TO COMBINE AND ADAPTER

1. At first use, refer to “Preparing the Adapter” in the Assembly section of this manual to properly adjust the position of the adapter leg pins, down stops, retracting tine drum and skid plates for your combine make and model, header model and crop type.

2. Attach adapter to combine feeder housing. See "Adapter Mounting Instruction" at back of book.

3. Choose an area that is as level as possible. Cutterbar should be on the ground unless ground conditions are soft. If ground conditions are soft, place 2x4 (40 mm) blocks at both ends of cutterbar. Also in soft ground conditions, an 8 ft. length of 2x4 laid in direction of travel under the feed pan and cutterbar will prevent scooping dirt when driving in.



HEADER STAND – 972/973/974

4. **For 972/973/974 Headers,** be sure header stand is secure in the down position, with pin (A) below channel as shown.
   For 963 Headers with gauge wheels, be sure gauge wheels are in stand position (E) at both outer legs.
   For 963 Headers without gauge wheels, be sure header stand (F) is in the down position at both outer legs.

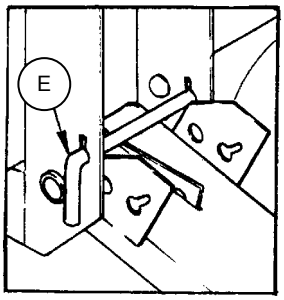

963 GAUGE WHEELS



WITHOUT GAUGE WHEELS
963 HEADER STAND POSITION

CAUTION: Be sure area is clear of bystanders before starting engine.

5. Place clevis pins from header legs in storage position (B). Slowly drive combine forward, aligning adapter legs with header legs.
   IMPORTANT: Keep the adapter leg height just under the header legs to ensure the adapter leg seats properly in the linkage supports in the header lower legs. For 974 Flex Headers, tie the cam arm (D) up when engaging adapter into header. Cam arm must rest on top of adapter down stop.

   Take care not to crush hydraulic hoses when driving into header.

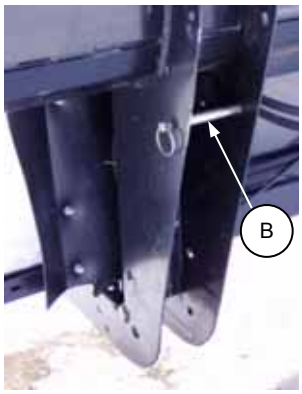

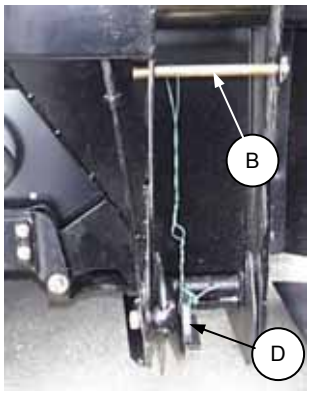

963/973 - STORE HEADER PINS - 974
TIE CAM ARM – 974 HEADER

ATTACHING HEADER TO COMBINE AND ADAPTER
(continued)

6. **IMPORTANT:** For smaller sized headers, it may be necessary to back off main float springs to ease installation of adapter into header.

7. **IMPORTANT: For 972/973/974 Headers,** when driving into header, align notches in adapter feed pan with retainers (C) welded to cutterbar. *Ensure that pan goes under the retainer and on top of cutterbar.* The feeder house can be raised to lower the front edge of the pan, and vice versa.

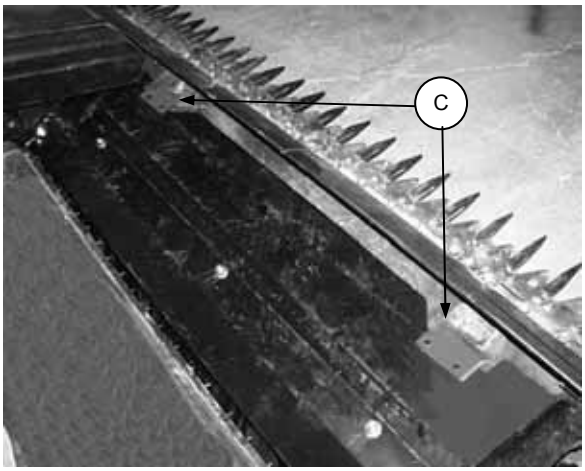

PAN ENGAGES RETAINERS – 972/973/974

8. Continue forward until top link can be connected. Connect top link (D) and secure with lynch pin.
   NOTE: Top link attaches to rear hole on adapter mounting lug for all combines except the following, which use the front hole:
   - All John Deere Combines
   - New Holland Combines where dust shields remain installed.
   - All combines with 963 Header

   NOTE: For headers with hydraulic top link, cylinder stays with header and is attached and detached at the adapter end.



CONNECT TOP LINK BEFORE LIFTING

ATTACHING HEADER TO COMBINE AND ADAPTER
(continued)

CAUTION: Always connect top link before raising header.

9. Raise adapter slowly, making sure adapter legs engage in header legs. Continue to lift until header is fully raised. Stop engine and remove key.

DANGER: To avoid bodily injury from fall of raised header, engage header lift cylinder stops when working on or around raised header. See your Combine Operator's Manual for details.

10. Ensure adapter leg is properly engaged in header lower leg as follows:
    963, 972 & 973 Headers: Adapter leg must engage in vibration isolator support at (C), both sides.
    974 Flex Headers: Adapter leg must engage in header float channel (D), both sides.

11. Install clevis pins (B), stored in step 5, to lock adapter to header, both sides. Install lynch pins to capture clevis pins.

12. Remove clevis pin from adapter float and move handle down to "float engaged" position (E). Replace clevis pin and install lynch pin to capture clevis pin. If pin is tight, extend top link to free it up.
    Repeat at other leg.

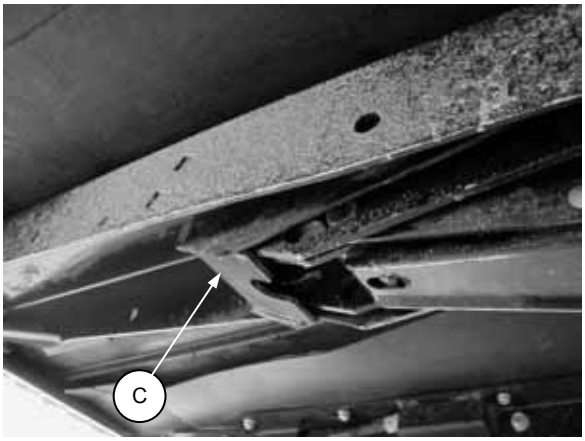



ADAPTER LEG MUST BE ENGAGED IN SUPPORT/CHANNEL – BOTH SIDES

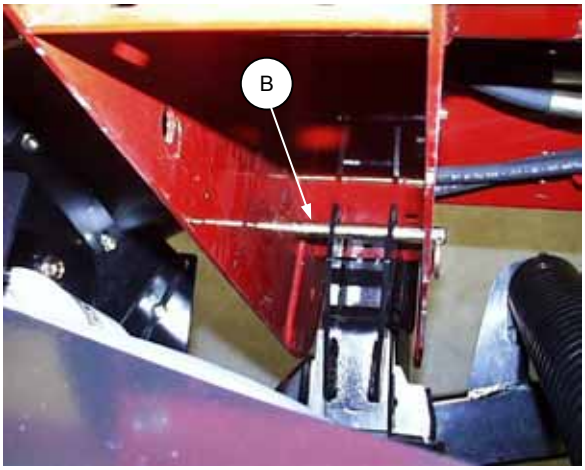

INSTALL PINS TO LOCK ADAPTER TO HEADER



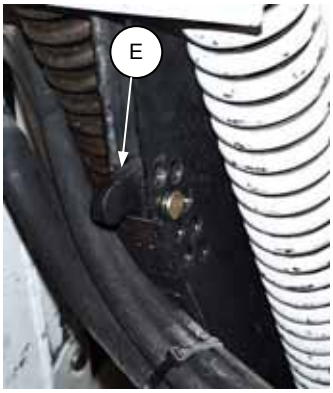

FLOAT LOCKOUT FLOAT ENGAGED
ADAPTER FLOAT

ATTACHING HEADER TO COMBINE AND ADAPTER (continued)

13. Install sickle driveline on combine feeder house shaft. Ensure driveline locking mechanism engages. See your combine Operator's Manual. Note shield chain remains attached to adapter frame at (F).

DANGER: Entanglement with rotating driveline will cause serious personal injury or death. Keep all driveline shields in place. Close all hinged covers.

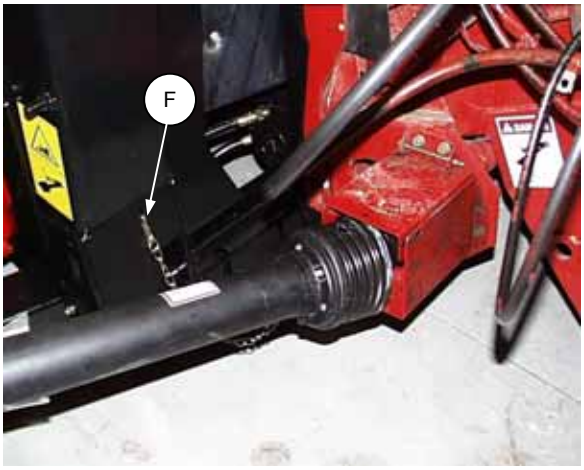

ATTACH DRIVELINE

14. Make the hydraulic line connections:
    - Reel drive pressure and return lines: Connect two hoses between header and combine.
    - Reel lift line: Connect one hose between header and combine.
    - Draper drive pressure and return lines: Connect two hoses between header and flow control valve on adapter. (Orange to Orange & Blue to Blue) **NOTE:** Route hoses behind float springs for 972/973/974 Headers and in front of float springs for 963 Headers as shown at right.
    - Reel fore-aft / Header tilt lines (if equipped): Connect two hoses between header and combine.

NOTE: Some combines are equipped with multi-link couplers that connect several hydraulic and electrical circuits at once.



- 972/973/974 HEADERS

963 HEADER -



DRAPER DRIVE HOSE ROUTING

15. Connect wiring harness(es) between header and combine. **NOTE:** A harness adapter is supplied with adapter completion package.

16. **For 972/973/974 Headers,** raise header stand to storage position (G).
    For 963 Headers with gauge wheels, remove pins at gauge wheels and place in field position (H) at both outer legs.
    For 963 Headers without gauge wheels, raise header stand to storage position (J) at both outer legs.

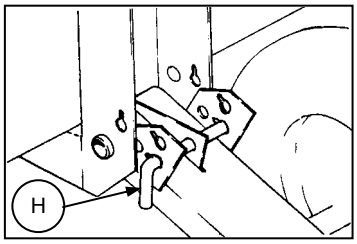

963 with GAUGE WHEELS



963 without GAUGE WHEELS
HEADER STAND STORAGE POSITION

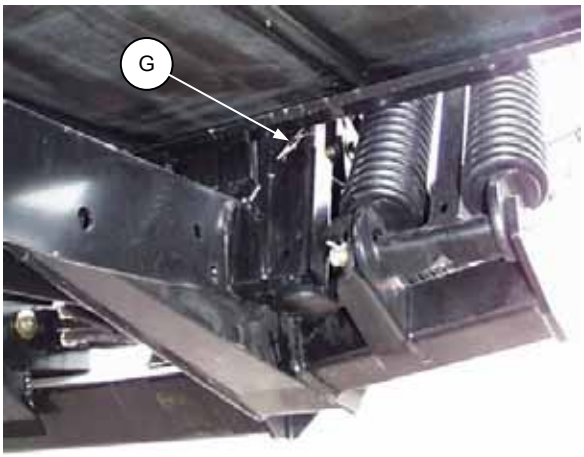

HEADER STAND STORAGE POSITION
972/973/974

HEADER ATTACHING & DETACHING

ATTACHING HEADER TO COMBINE AND ADAPTER (continued)

NOTE: Steps 17 to 19 are for 972, 973 and 974 Headers. For 963 Header, go to Step 20.

17. Fore aft positioning of the feed pan is critical. Pan must be far enough forward to securely engage the cutterbar, but not so far forward to cause jamming, which prevents proper function of the float system and causes header vibration. Adjust feed pan engagement as follows:
- **972 & 973 Headers:** Extend top link to maximum length and raise header about 6" (150 mm) off ground. Ensure adapter is resting on float down stops and adjust front of pan to provide a 5/16" (5-10 mm) gap at cutterbar. See NOTE at right.
- **974 Header:** Extend top link to maximum length and set header to maximum "smile" position by lowering onto 5" (125 mm) blocks at each end. Ensure adapter is resting on float down stops and adjust front of pan to provide a 5/16" (5-10mm) gap at cutterbar. See NOTE at right.

18. Return top link to mid-range operating length of 19-1/4" (490 mm).
19. Disengage lift cylinder stop and lower header to ground.

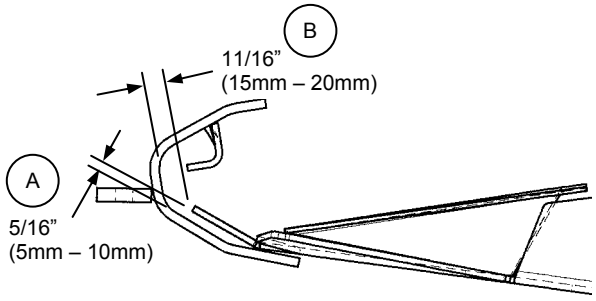

PAN CLEARANCE TO CUTTERBAR
972/973/974 HEADER
NOTE: A 5-10mm gap at (A) is equivalent to a 15-20mm gap at (B).

NOTE: Steps 20 & 21 are for 963 Headers only:

20. Ensure transition plate (C) fully engages adapter support anchors (D) on cutterbar.
NOTE: For all combines slide transition plate fully rearward in feed pan slots when adapter leg pin is located in hole A (page 39). Slide transition plate fully forward in feed pan slots when adapter leg pin is located in hole B (page 39). (See illustrations below).

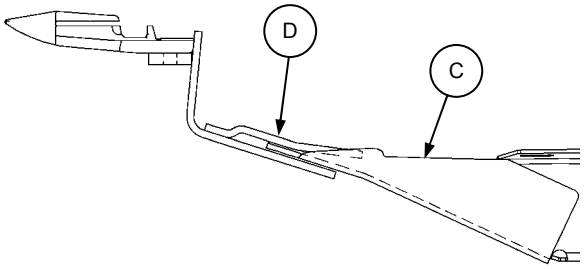

963 TRANSITION PLATE ENGAGEMENT

21. Adjust transition plate location as follows:

a. Raise the header. Stop engine and remove key. Ensure that adapter float arm is on the down stop.

DANGER: To avoid bodily injury from fall of raised header, engage header lift cylinder stops when working on or around raised header. See your Combine Operator's Manual for details.

b. Loosen six nuts (E).
c. Slide transition plate into position for your specific combine make and model (as shown below).
d. Tighten six nuts (E).

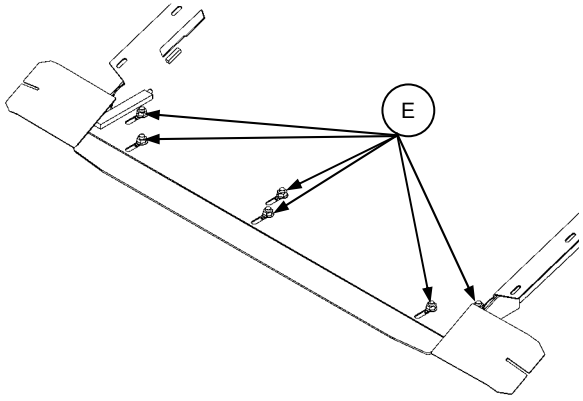

963/873 TRANSITION PLATE LOCATION
(When adapter leg pin in hole A – refer to page 39)

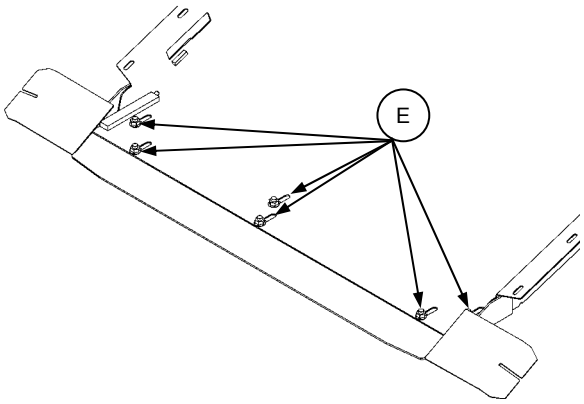

963/873 TRANSITION PLATE
(When adapter leg pin in hole B – refer to page 39)

HEADER ATTACHING & DETACHING

DETACHING HEADER FROM COMBINE AND ADAPTER

Using this procedure, adapter will remain attached to the combine. Instructions for detaching both header and adapter from combine are given on page 15.

1. Choose a level area. Lower the reel and raise the header so that cutterbar is about 18" off the ground. Stop engine and remove key.

DANGER: To avoid bodily injury from fall of raised header, engage header lift cylinder stops when working on or around raised header. See your Combine Operator's Manual for details.

DANGER: Wait for all movement to stop. A rotating driveline can cause entanglement resulting in serious personal injury or death.

2. Disconnect driveline from feeder house shaft. Detach chain at (A), remove pin (C) and store this end of driveline on header frame tube by securing or supporting at hydraulic/electrical bracket. Ensure storage location does not interfere with backing adapter out of header. Reinstall pin (C).
3. Disconnect hydraulic lines:
   - Reel lift between header and combine.
   - Reel drive pressure and reel return between header and combine.
   - Draper return (blue) and draper drive pressure (orange) between adapter and header.
   - Reel fore-aft / Header Tilt hoses between header and combine (if equipped).
     NOTE: Some combines are equipped with multi-link couplers that connect several hydraulic and electrical circuits at once.

IMPORTANT: Couple or cap all lines to prevent hydraulic system contamination except as noted in Warning below. Be sure header stored hoses and combine stored hoses are not entangled.

WARNING: For headers with hydraulic reel fore-aft, never connect the fore-aft couplers to each other. This would complete the circuit and allow the reel to creep forward in transport, resulting in instability.

4. Disconnect wiring harness between header and combine. Cap harnesses to prevent moisture from entering plugs.

5. Remove clevis pin from adapter float and move handle up to "float lockout" position. Install pin in hole (E) for 963/973/974 Headers, and hole (F) for 972 Header. Install clevis pin and lynch pin. Repeat at other side.

6. Remove clevis pin (B) from adapter lock position. Repeat at other leg. Place pins in storage hole higher up on leg.

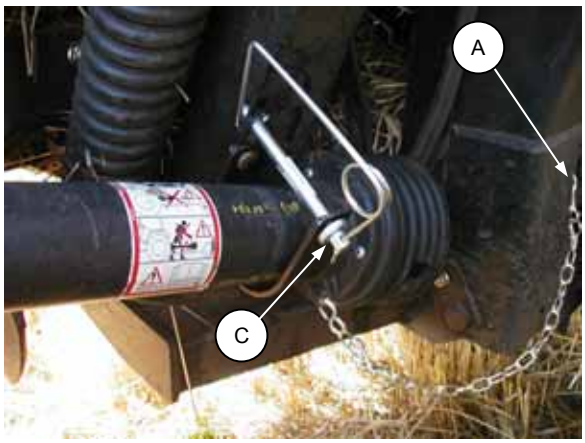

DETACH DRIVELINE & STORE ON HEADER

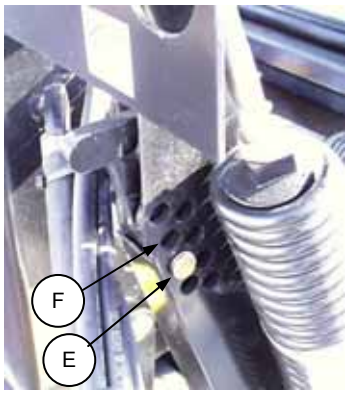


FLOAT LOCKOUT FLOAT ENGAGED
ADAPTER FLOAT

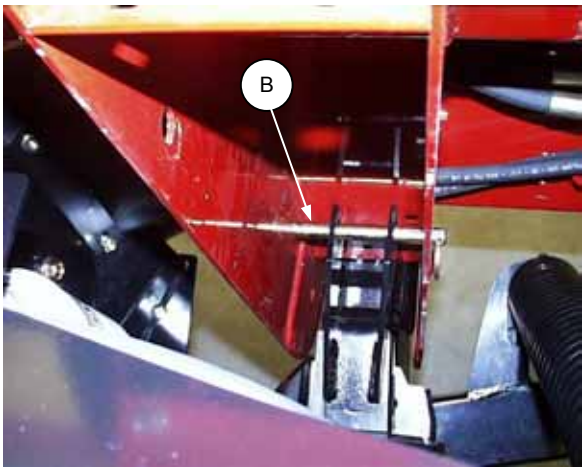

REMOVE PINS LOCKING ADAPTER TO HEADER

DETACHING HEADER FROM COMBINE AND ADAPTER
(continued)

NOTE: Steps 7 is for 963 Headers only.
For 972/973/974 headers, go to step 8.

7. For 963 headers with gauge wheels, remove pins at gauge wheels and place in stand position (B). Block both gauge wheels.

   For 963 headers without gauge wheels, lower header stands (F) to the engaged position at both outer legs. In dry conditions, cutterbar and header stands do not require blocking. *On soft ground only*, place 2x4's (40 mm blocks) under cutterbar, about 18" (450 mm) from each end of header, and under the header stands. Also in soft ground conditions, an 8 ft. length of 2x4 laid in direction of travel under the feed pan and cutterbar will prevent scooping dirt when reattaching.

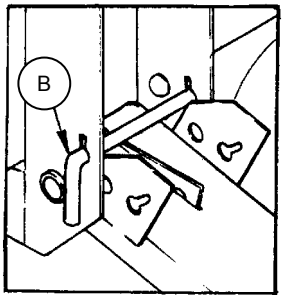

963 GAUGE WHEELS



WITHOUT GAUGE WHEELS
963 HEADER STAND POSITION

8. For 972/973/974 Headers, lower header stand (E). In dry conditions, cutterbar and header stand do not require blocking. *On soft ground only*, place 2x4's (40 mm blocks) under cutterbar, about 18" (450 mm) from each end of header, and under the header stand. Also in soft ground conditions, an 8 ft. length of 2x4 laid in direction of travel under the feed pan and cutterbar will prevent scooping dirt when reattaching.

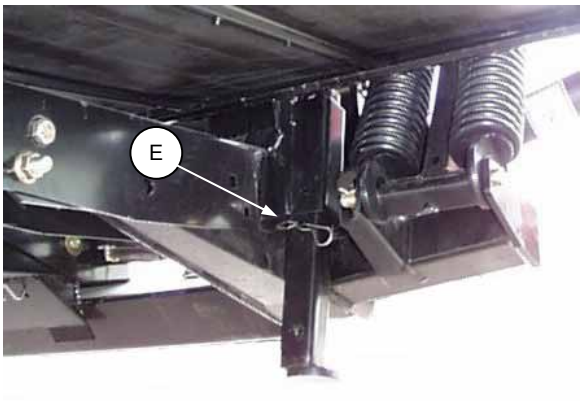

HEADER STAND – LOWERED – 972/973/974

All Header Models:

9. Disengage header lift cylinder stops and lower header to ground. Continue lowering adapter until top link is loose. Detach top link (G).
   NOTE: For headers with hydraulic top link, cylinder stays with header and is attached and detached at the adapter end.

10. Lower adapter until adapter legs are clear of header legs and slowly back away from header.



DISCONNECT TOP LINK

HEADER ATTACHING & DETACHING

DETACHING HEADER AND ADAPTER FROM COMBINE

Using this procedure, adapter will remain attached to the header. This would be appropriate when detaching header for transport. Instructions for detaching header only from adapter and combine are given on page 13.

1. Choose a level area. Lower the reel and raise the header so that cutterbar is 18" off ground. Stop engine and remove key.

DANGER: To avoid bodily injury from fall of raised header, engage header lift cylinder stops when working on or around raised header. See your Combine Operator's Manual for details.

2. Remove clevis pin from adapter float and move handle up to "float lockout" position (E). Lift handle as high as possible, then lower until holes line up. Install clevis pin and lynch pin. Repeat at other side. Note that pin (B) locking adapter to header remains in place.

   IMPORTANT: Float is not locked out unless handle is raised as high as possible. Actual pin position will vary with header settings.

3. Disconnect hydraulic lines between header and combine:
   - Reel drive pressure line.
   - Reel drive return line.
   - Reel lift line.
   - Reel fore-aft / Header tilt lines (if equipped).

   NOTE: Some combines are equipped with multi-link couplers that connect several hydraulic and electrical circuits at once.

IMPORTANT: Couple or cap all lines to prevent hydraulic system contamination except as noted in Warning below. Be sure header stored hoses and combine stored hoses are not entangled.

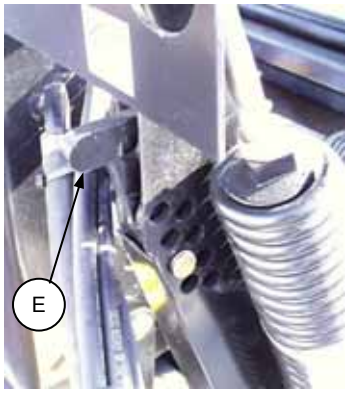



FLOAT LOCKOUT FLOAT ENGAGED
ADAPTER FLOAT

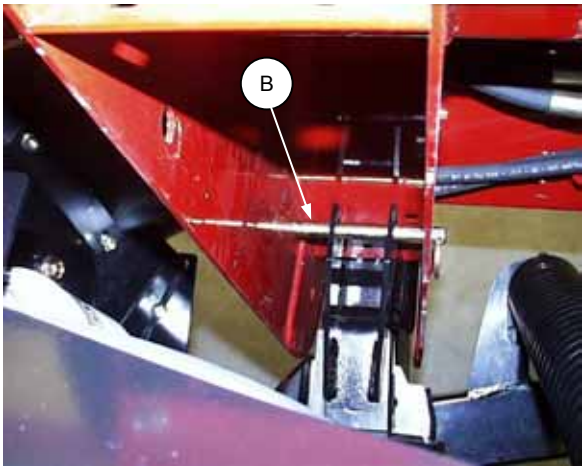

PINS LOCKING ADAPTER TO HEADER
REMAIN IN PLACE

WARNING: For headers with hydraulic reel fore-aft, never connect the fore-aft couplers to each other. This would complete the circuit and allow the reel to creep forward in transport, resulting in instability.

4. Disconnect wiring harness between header and combine. Cap harnesses to prevent moisture from entering plugs.

DANGER: Wait for all movement to stop before approaching driveline. A rotating driveline can cause entanglement resulting in serious personal injury or death.

5. Disconnect driveline from combine feeder house output shaft and store at hook (A) on adapter frame. Secure with pin (C). This is especially important when transporting headers in upright position on trailers.
6. Disconnect pump from combine feeder house output shaft and store on adapter.

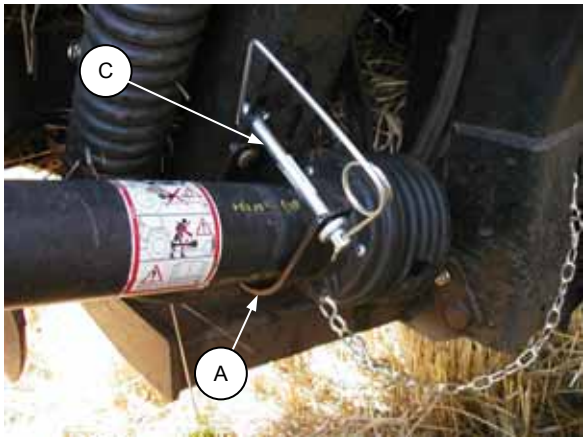

STORE DRIVELINE

CAUTION: Pump maybe hot. Wear gloves when handling pump.

7. Raise header all the way up and engage cylinder lift stops.
8. Disengage the feeder house/header lock system. See Mounting Instruction for your make of combine at back of book.
9. Disengage header lift cylinder stops on combine, start engine and lower header to ground.
10. Slowly back combine away from header.

HEADER ATTACHING & DETACHING

ATTACHING HEADER AND ADAPTER TO COMBINE

1. If applicable, block both gauge wheels or slow speed transport wheels at front and rear.

   NOTE: Choose an area that is as level as possible.

   CAUTION: Be sure area is clear of bystanders before starting engine.

2. Drive combine slowly forward and engage feeder house lifting device in adapter top cross member. See Mounting Instruction for your make of combine at back of book for details.

3. Raise header, stop engine and remove key.

   DANGER: To avoid bodily injury from fall of raised header, engage header lift cylinder stops when working on or around raised header. See your Combine Operator's Manual for details.

4. Connect feeder house lock system at bottom of adapter. See Mounting Instruction for your make of combine at back of book.
5. Install sickle driveline on L/H feeder house output shaft. Ensure driveline locking mechanism engages. See your combine Operator's Manual.

   DANGER: Entanglement with rotating driveline will cause serious personal injury or death. Keep all driveline shields in place.

6. Connect hydraulic lines between header and combine:
   - Reel drive pressure line.
   - Reel drive return line.
   - Reel lift line.
   - Reel fore-aft / Header tilt lines (if equipped).

NOTE: Some combines are equipped with multi-link couplers that connect several hydraulic and electrical circuits at once.

7. Connect wiring harness between header and combine.
8. Remove clevis pin from adapter float and move handle down to “float engaged” position (E). Replace clevis pin and install lynch pin to capture clevis pin. If pin is tight, extend top link to free it up. Repeat at other side.
9. Install pump on R/H feeder house output shaft. Wear gloves when handling pump. See Mounting Instruction for your make of combine at back of book.
10. Disengage header lift cylinder stops on combine and lower header so cutterbar is 18” off ground.



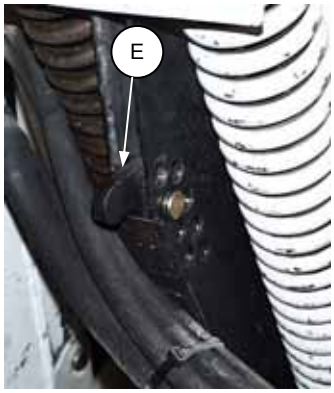

FLOAT LOCKOUT FLOAT ENGAGED
ADAPTER FLOAT

OPERATION

BREAK-IN PERIOD

1. Run drapers slowly for 5 minutes to fill hydraulic lines, then check oil level at (A). Maintain level between LOW and FULL when oil is cold.
   NOTE: Breather screw on cap (A) has been tightened for shipping. Loosen screw before operating adapter.
   NOTE: When ambient temperatures are above 35º C (95º F), maintain oil level in the low portion of the range to prevent overflow at breather under operating temperatures.

2. Change the hydraulic oil filter (D) on combine adapter after 50 hours operation and every 250 hours thereafter.

3. Change gearbox oil after 50 hours operation and every 1000 hours or 3 years thereafter.

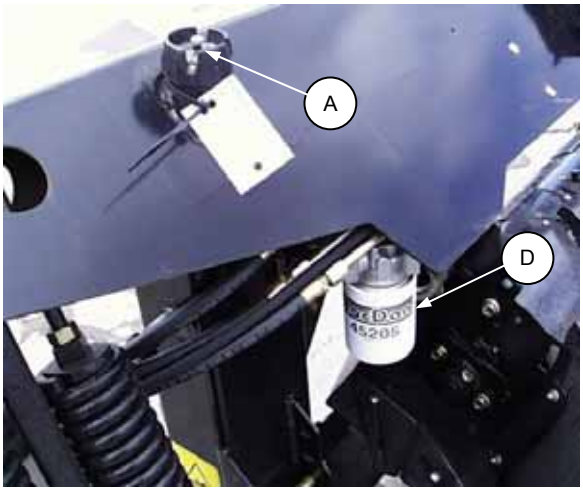

CHECK HYDRAULIC OIL LEVEL
CHANGE OIL FILTER & GEARBOX OIL

See "Break-In Period" in Header Operator's Manual for further information on break-in maintenance.

DRAPER SPEED CONTROL

Speed of the header drapers is adjusted at the flow control on the combine adapter. Rotate flow control knob (C) to a number suited to the crop. The higher the number, the faster the draper speed. The settings in the chart are recommended as a starting point for optimum feeding capacity. Align the desired number at the twelve o'clock position (dial no. 4 shown in inset below).
NOTE: If sufficient draper speed cannot be achieved, a possible cause is low relief pressure. See "Flow Control Relief Pressure" in Maintenance/Service section.

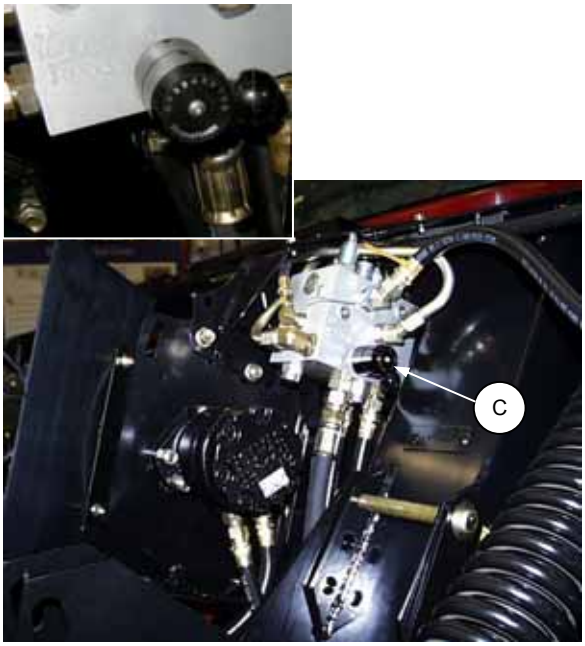

DRAPER SPEED CONTROL

CROP	DIAL NO.
Barley	3
Beans, Edible	4
Canola	3
Flax	5
Lentils	3
Milo	3
Oats	3
Peas	3
Rice	5
Safflowers	4
Soybeans	5
Sunflowers	4
Wheat	3

963/972/973 HEADER FLOTATION

NOTE: *For float adjustment when working with the 974 Flex Header, see the Header Operator's Manual.*

IMPORTANT: Set header float as light as possible without causing excessive bouncing. This avoids:
- frequent breakage of sickle components
- scooping soil
- soil build-up at cutterbar in wet conditions,

To check header float:
1. Raise feeder house and engage lift cylinder stops.
2. Move handle down to engage float as shown at (E), both sides. If pin is tight, extend top link to free it up.
3. Set top link to mid-range length (19-1/4") (490 mm).
4. Disengage lift cylinder stops and lower header so the cutterbar is 1 to 6 inches (25 to 150 mm) above the ground.
5. With cutterbar 1 to 6 inches (25 to 150 mm) above the ground, grasp the crop divider rod and lift up. Under normal conditions, when cutting above the ground, it should require about 50 - 70 lbs. force (225 - 315 N) to lift divider at either end. Cutting on the ground requires lighter float, approximately 30 lbs. (135 N) at each divider point.

TIPS:
- **For cereal grain crops where you will be working with cutterbar off ground, float arm should be touching down stop at (A).**
- **For soybeans or other crops where you will be working with cutterbar on ground, gap between float arm and down stop should be 1/2" (13 mm) as illustrated. Notch (D) is provided as an alignment aid for this setting.**
  See next page for operating tips when cutting on the ground:

To adjust header float:
1. Raise feeder house and engage lift cylinder stops.
2. Loosen jam nuts (B), two per side.
3. Tighten bolts (C) at both sides of adapter to increase float (which makes header lighter when lowered to ground).
   Loosen bolts to decrease float (which makes header heavier when lowered).
4. Tighten jam nuts (B).



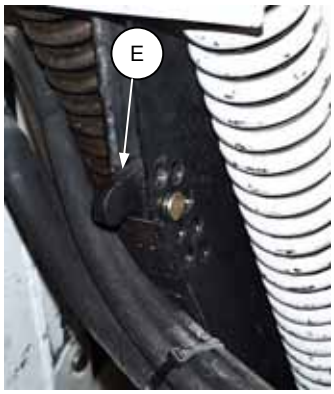

FLOAT LOCKOUT ADAPTER FLOAT — FLOAT ENGAGED

NOTE: Once float is set, float lockout is engaged by raising handle **as high as possible**, then aligning the closest hole for installation of pin. The float lock-out position shown above is "as shipped". This position is only necessary when adapter is being removed from header (or installed in header).

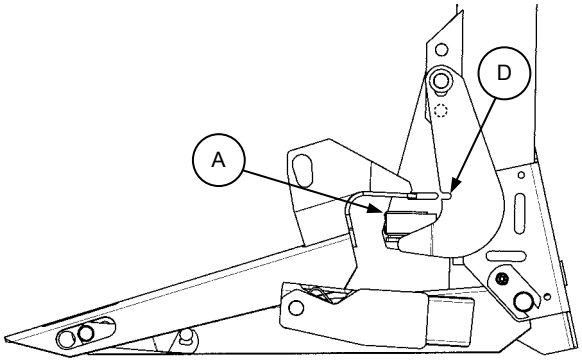

- 0 GAP FOR CUTTING ABOVE GROUND
- ALIGN FLOAT ARM WITH NOTCH FOR CUTTING ON GROUND (1/2" GAP)

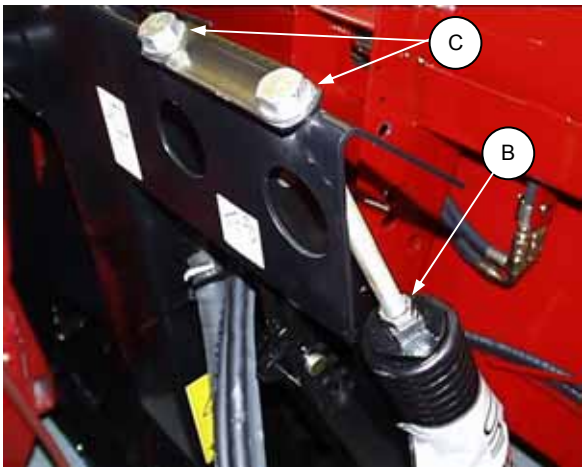

FLOAT ADJUSTMENT

963/972/973 HEADER FLOTATION (continued)

When working with cutterbar on ground (e.g. soybeans):

- Set top link length to mid-range position, 19-1/4" (490 mm).
- Set float arm gap to 1/2" (13 mm) as described on previous page.
- Best float operation will occur with minimum extra weight on header. Consider removing gauge wheels or transport attachments, if equipped.
- Adjust float optimizer (if equipped) or feeder house height while watching float indicator to set cutterbar down force. Installation of the float optimizer attachment is recommended for cutting on the ground if the combine is equipped as required.
- Adjust header angle to achieve desired stubble height.
- In rocky fields, adjust skid shoes down. This raises guards when operating at the flattest header angle to minimize scooping rocks.
- If cutterbar begins to push dirt during operation, adjust header height (with optimizer or feeder house height control) to minimize pushing.
- Header angle and reel fore-aft position can be changed without significantly effecting header flotation (down force).

Header Floatation for 963 Headers with Gauge Wheel/Transport Wheel:

1. Set guard angle and reel to desired position for cutting conditions and slide handle (A) down to engage float.
2. Choose gauge wheel position to maintain proper gauge wheel spring force at desired cutting height.

Field Position 1: when cutter bar is above the ground 4 to 12 inches (100 to 300 mm) cutting height)

Field Position 2: when cutterbar is close to the ground 2 to 5 inches (50 to 125 mm) cutting height)

Storage (locked out): when cutter bar is on the ground 0 to 2 inches (0 to 50mm) cutting height. Header is run on skid shoes and height is controlled by guard angle.



ADAPTER FLOAT ENGAGED

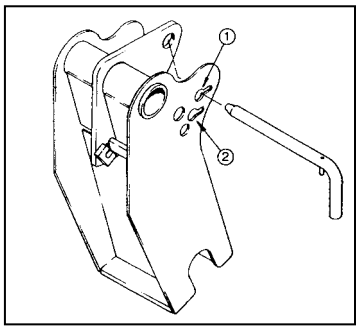

TRANSPORT PKG
LEFT WHEEL SUPPORT

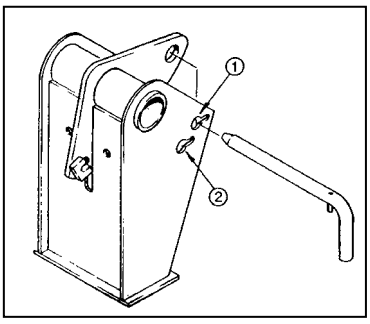

TRANSPORT PKG
RIGHT WHEEL SUPPORT

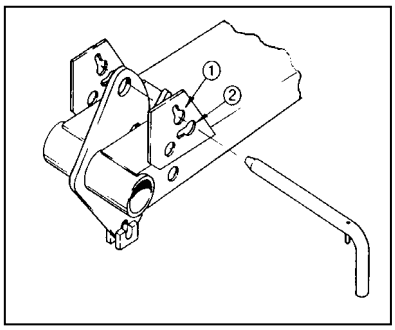

STANDARD GAUGE
WHEEL SUPPORT

963/972/973 HEADER FLOTATION

Header Floatation for 963 Headers with Gauge Wheel/Transport Wheel (continued):

3. Position the header at desired cutting height with gauge wheel pins install in the appropriate position.

   At this position inspect the gap at (B) to ensure that the gauge wheel springs are not pushing the header off the float down-stop pads. If this is true proceed to step 4. If gap at (B) is between 0 to 1/2 inch (0 to 13 mm) proceed to step 4.

   If gap at (B) is larger than 1/2 inch:

   a.) Lift up on crop divider to check the header's floatation. If float is lighter than 100 lbs (445 N) continue on with setting procedure, if not check to see how many coil springs are installed in the gauge wheels. If two springs are installed remove one spring from each side and repeat step 3.

   b.) If only 1 spring is present in the gauge wheels, move pin to the next available hole. Ex. Move pin from position 1 to position 2 or from position 2 to the stand position

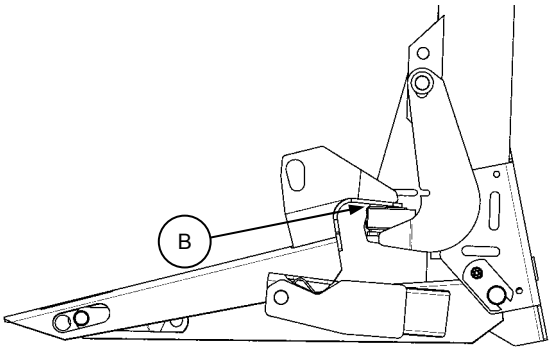

4. Adjust float to desired setting [recommended 80 to 100lbs (355 to 445N) while keeping 0 to 1/2 inch (0-13 mm) gap at (B). Measure gap with header at desired cutting height.

   Loosen jam nuts (D) and turn adjustment bolts (C) clockwise to increase float.

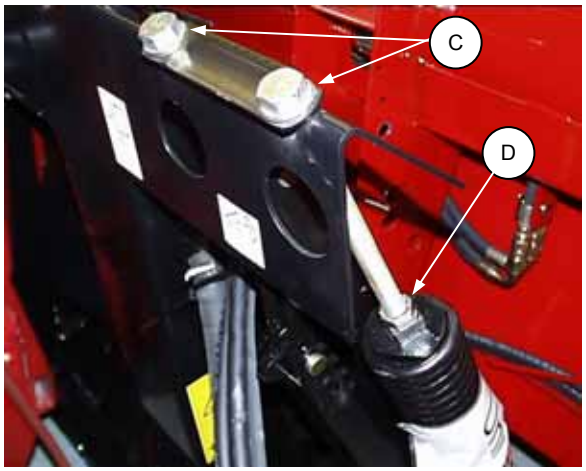

FLOAT ADJUSTMENT

Loosen jam nuts (D) and turn adjustment bolts (C) counterclockwise to decrease float.
NOTE: Settings may require re-adjustment after an adjustment to header angle or reel position.

963/972/973 HEADER FLOTATION (continued)

Header Floatation for 972/973 Headers with Gauge Wheel/Transport Wheel:

1. Set guard angle and reel to desired position for cutting conditions and slide handle (A) down to engage float.

2. Lower header to remove the pins from the gauge wheels



ADAPTER FLOAT ENGAGED

3. Position the header at the desired cutting height (without gauge wheel pins in).

   At this position inspect the gap at (B) to ensure that the gauge wheel springs are not pushing the header off the float down-stop pads. If gap at (B) is between 0 to 1/2 inch (0 to 13 mm) proceed to step 4.

   If gap at (B) is larger than 1/2 inch, lift up on crop divider to check the header's floatation. If float is lighter than 100 lbs (445 N) continue on with setting procedure, if not check to see how many coil springs are installed in the gauge wheels. If two springs are installed remove one spring from each side and repeat step 3.

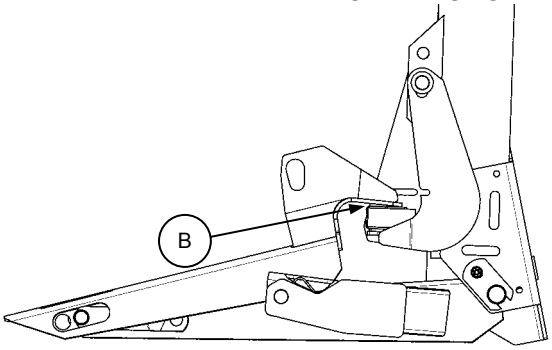

4. Adjust float to desired setting [recommended 80 to 100lbs (355 to 445N) while keeping 0 to 1/2 inch (0 to13 mm) gap at (B). Measure gap with header at desired cutting height.

   Loosen jam nuts (D) and turn adjustment bolts (C) clockwise to increase float.

   Loosen jam nuts (D) and turn adjustment bolts (C) counterclockwise to decrease float.

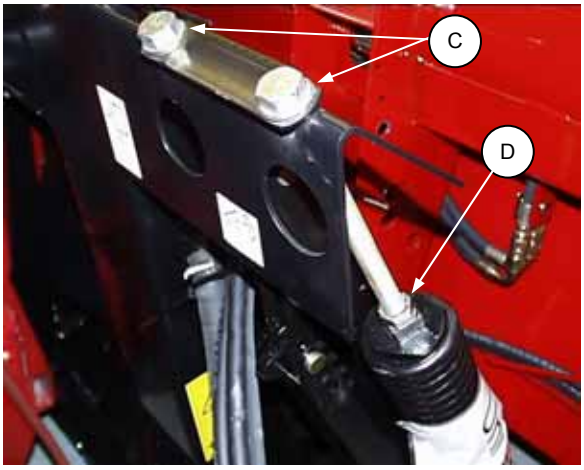

FLOAT ADJUSTMENT

5. With header at cutting height, inspect position of gauge wheel retaining slot. Insert pin into the hole that is most centered in the slot.

   Transport package uses a different bracket however, there is still a slotted hole to place the pin through. Utilize the same steps to set the height.

   NOTE: If slot is positioned above the top hole, place the wheels into storage position and lower skid shoes to cut in the close proximity to the ground. Refer to Floatation Setting section.

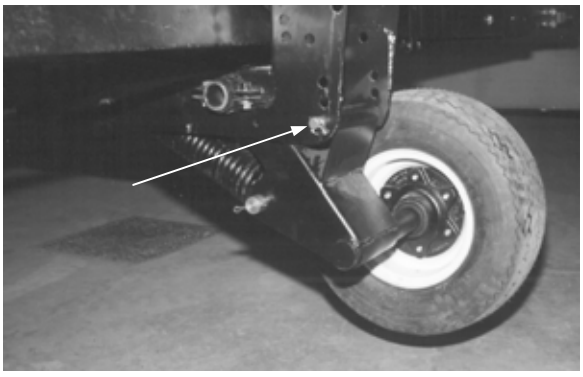

NOTE: Settings may require re-adjustment after an adjustment to header angle or reel position.

HEADER LEVELLING

NOTE: The following applies if gap (A) is zero. If float is set light (operating cutterbar on ground), then level header by adjusting main float springs.

Adjust header levelling with header at the flattest angle. See Header Angle, next page.

1. With header on level ground, lower header so cutterbar is 2 to 4 inches (50 to 100 mm) off the ground.
2. Check level of header by measuring cutterbar to ground at both ends.
3. To lower cutterbar on one end, remove a shim (C) from under rubber pad (B) in down stop assembly. Adjust shim quantity side to side, placing from 0 to 2 shims to level header.

To add or remove a shim:

- Lower cutterbar to ground and continue lowering feeder house so gap at (A) increases.
- Remove nuts (H), disassemble and add or remove shim(s) as required.
- Reassemble and adjust header flotation to gap (A) setting recommended in Header Floatation section. Note the different positioning of the pad assembly on the support, depending on header model and combine configuration:
  - 963/972 mounted on combines with dust shields removed – position (D) – inboard set of side-by-side holes.
  - 963/972 mounted on combines with dust shields on – position (F). – fore-aft set of holes.
  - 973 on all combines – position (D) – inboard set of side-by-side holes.
  - 974 on all combines – position (E) – outboard set of side-by-side holes.

NOTE: To simplify this procedure: With header adjusted to steepest angle (longest top link length) and fully floated, the entire down stop assembly can be removed by removing pin (G).

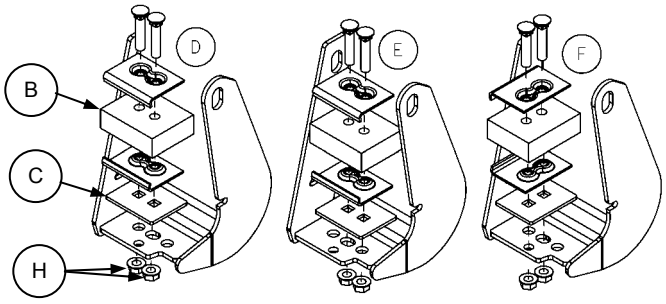

HEADER LEVELLING - L/H SHOWN
(DOWN STOP PAD ORIENTATION)

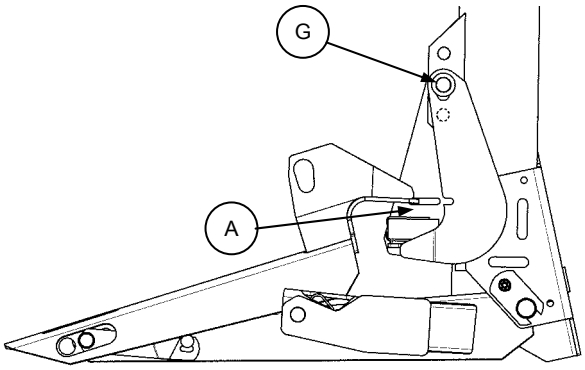

HEADER ANGLE

The header (or guard) angle can be adjusted flatter or steeper to suit your conditions. Angle range varies with combine set-up, tire size, adapter down stop position, etc.
See Combine Operator's Manual for header levelling and additional header angle adjustments. For combines with adjustable face-plate angle, see “Adjustments and Checks” on page 50 to determine if adjustment to face plate angle is required.

IMPORTANT: A flat header angle is recommended for normal conditions. A flatter header angle reduces sickle section breakage and reduces soil scooping or build-up at the cutterbar in wet conditions. Use a steeper angle to cut very close to the ground, or in down crop for better lifting action. The Model 973 and 974 headers have been designed so the guard angle is flatter than the draper angle. This allows operating at a mid-range header angle while still benefiting from a flat guard angle.

IMPORTANT: Always check adapter drum clearance to header frame after adjusting header angle. Flattening the header angle will reduce the clearance to the drum fingers. For units with hydraulic top link, fully retract the cylinder to check finger clearances.

To adjust header angle with mechanical link (972 & 973 Headers):

1. Lower cutterbar to ground and continue lowering to drop feeder house another 2 to 5 inches (50 to 125 mm).
2. Back off the locking collar (A) on top link turnbuckle.
3. Using a punch in hole in turnbuckle (B), turn to adjust header angle.
   Longer top link = steeper header angle
4. At desired adjustment, tighten locking collar (A) securely against turnbuckle to fix the position. Collar should point up as shown to prevent contact with header frame when header floats fully up.

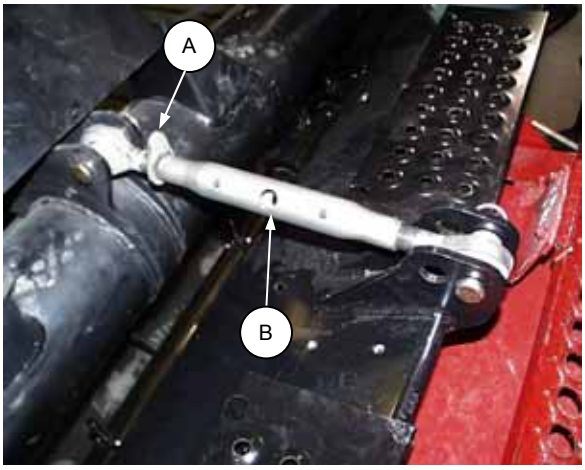

HEADER ANGLE
MECHANICAL ADJUSTMENT

HEADER ANGLE HYDRAULIC ADJUSTMENT

An optional kit is available for 972 and 973 Headers which allows adjustment of header angle from the combine cab by means of a hydraulic cylinder. This is standard equipment for the 974 Header.
See “Unloading and Assembly” section for information on assembly and use of this option.

WIDENING THE DELIVERY OPENING (973/974 Headers Only):

In conditions where severe “bridging” is occurring (bulky crop being thrown across the opening), widen the header side draper opening to allow the crop to fall onto the feed draper. See “Delivery Opening” in your Header Operators’ Manual for procedure. To achieve smooth feeding after widening opening, add outboard tines to the adapter drum. See “Tine Installation”, page 32.
NOTE: Check clearance to ensure that RTD fingers will not contact side drapers.

Combine Model	New Delivery Opening	Qty. of tines to be added to drum
John Deere, New Holland CX, Lexion (Wide Decks)	1620 mm (63.7”)	2 per side (4 total)
Case 77/80/88, CNH AFX, New Holland CR 970/980, Lexion (Mid-Size Decks)	1265 mm (49.8”)	2 per side (4 total)
Case 60/66, New Holland CR	1165 mm (45.9”)	2 per side (4 total)

WINDROWING WITH THE COMBINE

When laying a windrow, stop flow to the feed draper and drum as follows:

- Remove hose (A) at pump (inboard port).
- Remove hose (B) at hydraulic line.
- Connect hose (B) (removed at hydraulic line) to open port at pump using connector hose listed below.
- Connect hose (A) (removed at pump) to hydraulic line using male union listed below.

NOTE: The following parts will be required to make the new connections: Part No. 33422 Hose and Part No. 30558 Male Union.

For a complete list of steps to convert to windrowing mode (delivering crop to the end of the header) see “End Delivery” in the Operation section of your Header Operator’s Manual.

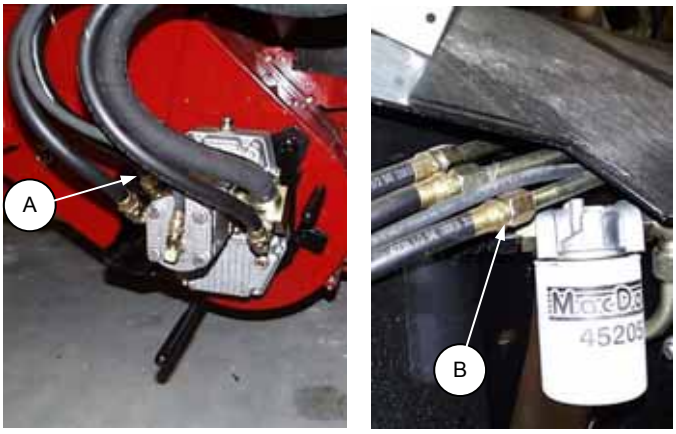

RE-PLUMB HOSES TO STOP ADAPTER DRAPER & DRUM FOR WINDROWING

Feed Pan Ground Clearance Adjustment for Windrowing – 972/973/974 Headers

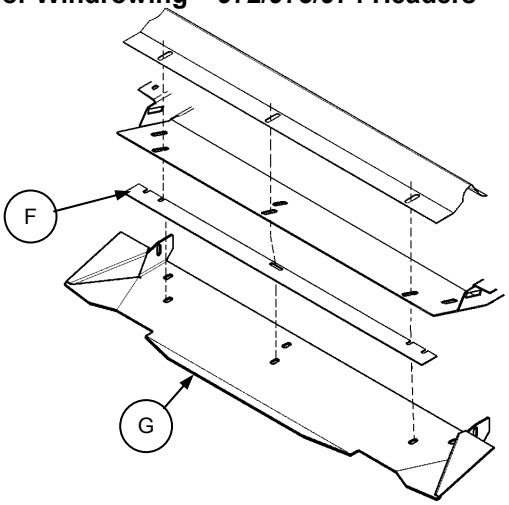

Assembled for Maximum Ground Clearance

Spacer plate (F) is factory assembled for best ground clearance, with plate (F) mounted to the forward set of holes in pan (G) as shown above left. When windrowing with the combine and in certain other conditions, clearances may be such that the header drapers catch on the deck or on side deflectors. If so, move spacer plate (F) to rear set of holes in pan (G) as shown above right. To reposition spacer plate (F):

- Remove two center bolts (K) and loosen bolts at outside ends of pan.
- Slide spacer out (forward) and slide it in from the back onto the loosened bolts.
- Replace the two center bolts, exchanging positions so the 1-1/4” bolt again goes through the spacer plate.
- Exchange positions of the bolts at outside ends of pan so the 1-1/4” bolts go through spacer plate.

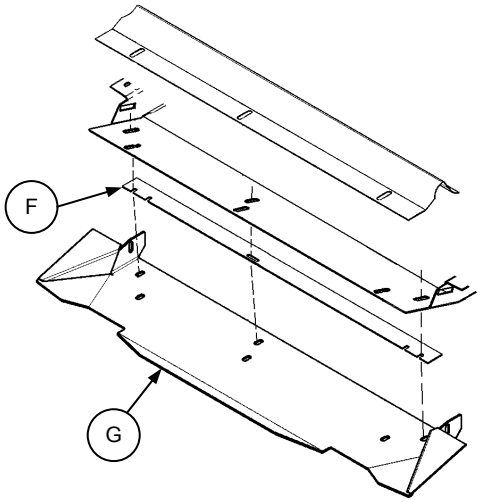

Assembled for Windrowing with a Combine

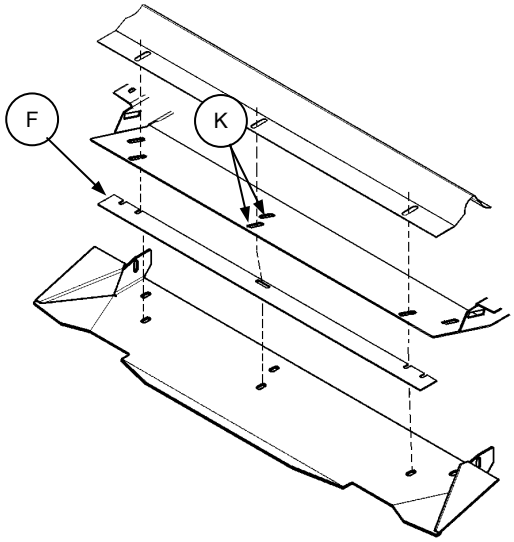

To change position: Remove center bolts (K), loosen outer bolts, and slide plate (F) out.

MAINTENANCE/SERVICE

SERVICE PROCEDURES



CAUTION: To avoid personal injury, before servicing machine or opening drive covers:

1. **Fully lower header and reel. If it is necessary to service in the raised position, first engage header lift cylinder stops and reel props.**
2. **Disengage header drive clutch.**
3. **Stop engine and remove key.**
4. **Engage park brake.**
5. **Wait for all moving parts to stop.**
6. **Park on level surface when possible. Block wheels securely. Follow all recommendations in your Combine Operator's Manual.**
7. **Wear close-fitting clothing and cover long hair. Never wear dangling items such as scarves or bracelets.**
8. **Wear protective shoes with slip resistant soles, a hard hat, protective glasses or goggles and heavy gloves.**
9. **Be prepared if an accident should occur. Know where the first aid kit and fire extinguisher are located and how to use them.**
10. **Keep the service area clean and dry. Wet or oily floors are slippery. Wet spots can be dangerous when working with electrical equipment. Be sure all electrical outlets and tools are properly grounded.**
11. **Use adequate light for the job at hand.**
12. **Replace all shields removed or opened for service.**
13. **Use only service and repair parts made or approved by the equipment manufacturer. Substituted parts may not meet strength, design or safety requirements.**
14. **Keep the machine clean. Never use gasoline, naphtha or any volatile material for cleaning purposes. These materials may be toxic and/or flammable.**

RECOMMENDED LUBRICANTS

GREASE

Use an SAE Multi-Purpose High Temperature Grease with Extreme Pressure (EP2) Performance and containing a maximum of 1% moly (molybdenum disulphide).

For driveline slip-joints only, increased moly content (up to 10%) is recommended. **IMPORTANT:** Do not use this higher moly content grease on bearings, as it may cause excessive wear in high speed applications.

HYDRAULIC OIL

Use single grade trans-hydraulic oil. If an oil brand from the recommended list is not available, use 15W40 engine oil. If 15W40 oil is substituted, drain adapter reservoir first. Do not mix engine oil with trans-hydraulic oil. The following oil company and equipment manufacturer brand names are **recommended**:
Petro Canada Duratran
Case IH Hy-Tran Plus®
John Deere Quatrol® J20C
Agco Power Fluid 821XL

GEARBOX OIL

SAE 85W-140 gear lubricant (API Service Classification GL-5)

CAPACITIES

Adapter Gearbox – 450 mL (15 U.S. oz.)
Adapter Hydraulic System (Draper Drive)
Full system: 33 litres (8-3/4 U.S. gals.)
Tanks only: 27 litres (7-1/8 U.S. gals.)

STORING AND HANDLING LUBRICANTS

Your machine can operate at top efficiency only if clean lubricants are used. Contaminant in lubricants is the most likely cause of bearing and hydraulic system failure. Use clean containers to handle all lubricants. Store lubricants in an area protected from dust, moisture and other contaminants. Keep hydraulic couplers and connectors clean.

SEALED BEARING INSTALLATION

1. Clean shaft and coat with rust preventative.
2. Install flangette, bearing, flangette and lock collar. The locking cam is only on one side of the bearing.
3. Install and tighten the flangette bolts.
4. When the shaft is located correctly, lock the lock collar with a punch. The collar should be locked in the same direction the shaft rotates. Tighten the set screw in the collar.
5. Loosen the flangette bolts on the mating bearing one turn and re-tighten. This will allow the bearing to line up.

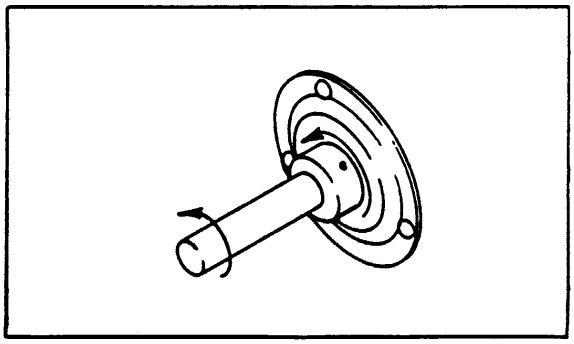

TIGHTEN COLLAR IN DIRECTION SHAFT ROTATES

GREASING THE ADAPTER

See “Recommended Lubricants” in this section for recommended greases.

The adapter has eight greasing points as shown below and on the following page. Use the hour meter in the combine cab and the “Maintenance Checklist” provided to keep a record of scheduled maintenance.

Procedure:

1. Wipe grease fitting with a clean cloth before greasing, to avoid injecting dirt and grit.
2. Inject grease through fitting with grease gun until grease overflows fitting.
3. Leave excess grease on fitting to keep out dirt.
4. Replace any loose or broken fittings immediately.
5. If fitting will not take grease, remove and clean thoroughly. Also clean lubricant passageway. Replace fitting if necessary.

100 Hours or Annually:

1. Drum Bearing (A) – one fitting
   NOTE: Alignment of fitting with opening may be difficult when header is attached. Aligning drum access cover bolts (B) with hole (H) in drum support plate will properly align fitting.

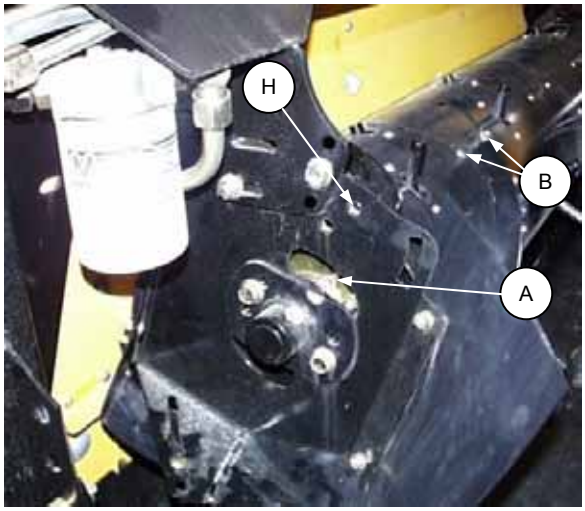

DRUM BEARING

GREASING THE ADAPTER

100 Hours or Annually (continued):

2. Feed Draper Idler Roller Bearings (C) – two fittings.
   Replace bearings every 500 hours or annually.



FEEDER DRAPER IDLER ROLLER BEARINGS

3. Feeder Draper Drive Roller Bearing (D) – one fitting at right end of roller
   NOTE: To avoid damage to bearing seal, when greasing drive roller bearing use a single slow stroke of grease gun.
   Replace bearing every 500 hours or annually.

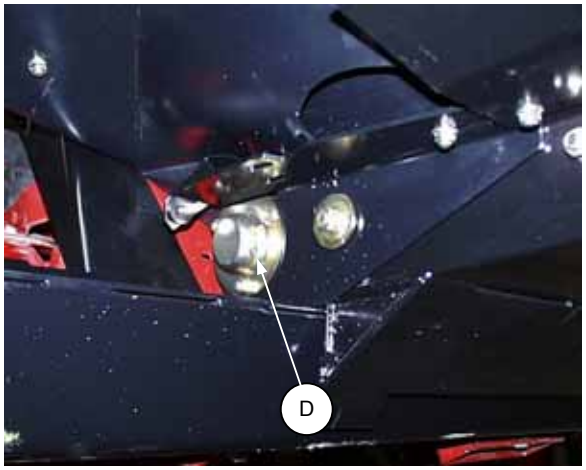

FEEDER DRAPER DRIVE ROLLER BEARING

4. Lower Link Pins (E) – four fittings (two per side)

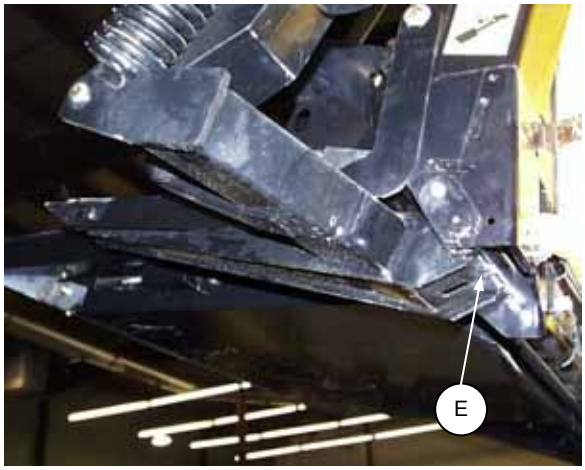

LOWER LINK PINS – REAR OF ADAPTER



LOWER LINK PINS – FRONT OF ADAPTER

FEED DECK CLEANOUT

If operating in conditions which plug the feed deck with dirt, remove cover (A) to allow dirt to fall out. If seed loss is a concern, replace cover after cleaning out inner area. Cover bolts are in keyhole of frame. Loosen hardware, then slide cover until bolts exit keyhole.



FEED DECK CLEANOUT COVER

HYDRAULIC SYSTEM

Hydraulic Hoses and Lines

Check hydraulic hoses and lines daily for signs of leaks.

WARNING: Avoid high-pressure fluids. Escaping fluid can penetrate the skin causing serious injury. Relieve pressure before disconnecting hydraulic lines. Tighten all connections before applying pressure. Keep hands and body away from pinholes and nozzles that eject fluids under high pressure. Use a piece of cardboard or paper to search for leaks. IF ANY fluid is injected into the skin, a doctor familiar with this type of injury must surgically remove it within a few hours or gangrene may result.

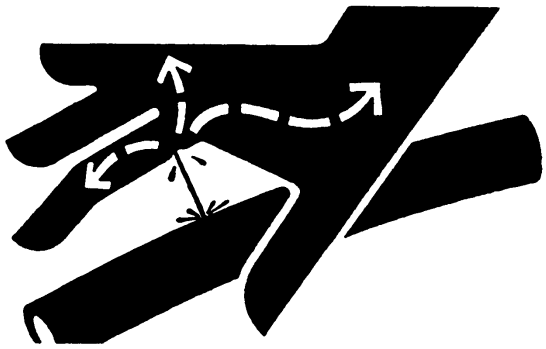

AVOID HIGH PRESSURE FLUIDS

IMPORTANT:

- Ensure all hydraulic couplings are fully engaged before operating header.
- Keep hydraulic coupler tips and connectors clean. Dust, dirt, water and foreign material are the major causes of hydraulic system damage.
- To prevent improper mixing of oils:
  If header is to be switched back and forth from combine to windrower, change oil in windrower tractor (or Bi-Directional Tractor) hydraulic system to match combine hydraulic system.

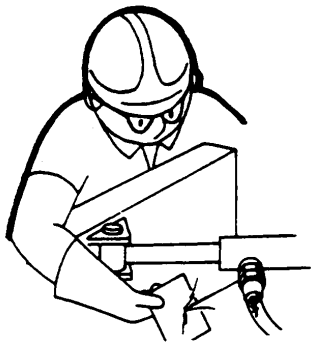

CHECK PROPERLY FOR LEAKS

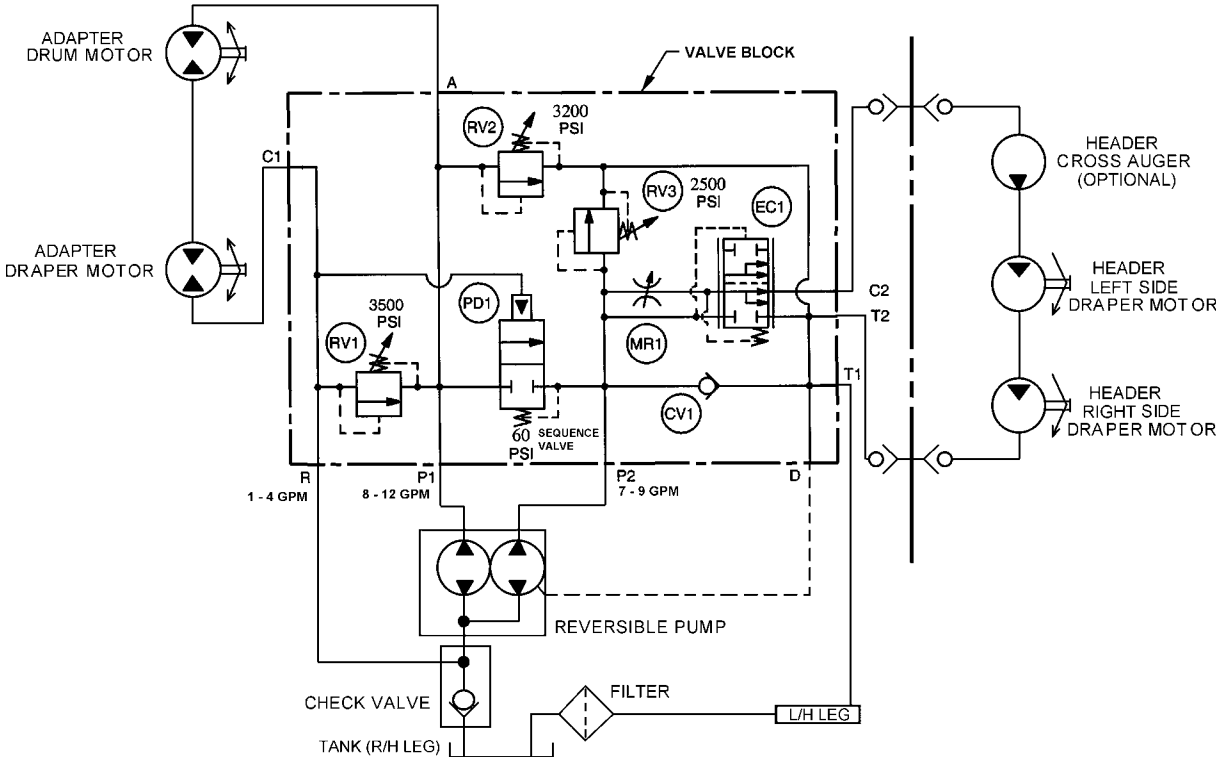

COMBINE ADAPTER HYDRAULIC SCHEMATIC

HYDRAULIC SYSTEM (continued)

Hydraulic Oil

The combine adapter's hydraulic system provides oil for the draper and feed drum drives.
Check oil level every 25 hours at dipstick (A). Maintain level between "LOW" and "FULL" marks when oil is cold.

Capacity: Full system: 33 litres (8-3/4 U.S. gallons)
Tanks only: 27 litres (7-1/8 U.S. gallons)
Type: See recommended lubricants, page 25.

NOTE: When ambient temperatures are above 35º C (95º F), maintain oil level in the low portion of the range to prevent overflow at breather under operating temperatures.

Change hydraulic oil every 1000 hours or 3 years:

1. Remove dipstick cap (A).
2. Remove plug (B) at right reservoir and hose (D) at left reservoir. Loosen elbow at (D) to point down for drainage.
   NOTE: A drain pan with a capacity of 15 litres (4 U.S. gallons) will be required for each reservoir.
3. Replace the hydraulic oil filter. See below.
4. Replace plug (B). Tighten elbow fitting and replace hose at (D).
5. Remove hose at (E) and fill the reservoirs through the blue marked fitting from a pressurized oil source.
6. Replace cap (A) and hose at (E).

NOTE: Do not fill system through cap port (A). Oil will not reach left reservoir. If a pressurized source of oil is not available, pump oil from right reservoir to left as follows:

- Leave all plugs and hoses installed.
- Fill R/H reservoir with oil through cap port (A).
- Run the adapter pump until feed drum stops turning.
- Re-fill R/H reservoir.
- Repeat procedure until oil level in R/H reservoir remains between LOW and FULL on dipstick.

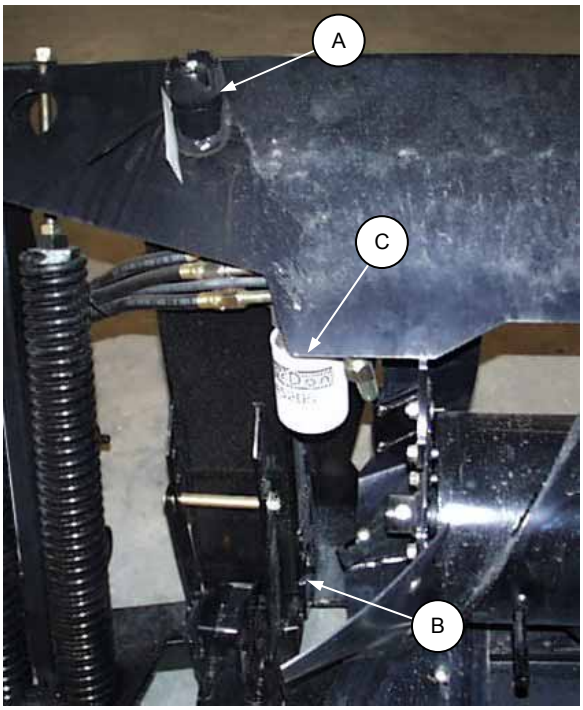

RIGHT HYDRAULIC RESERVOIR

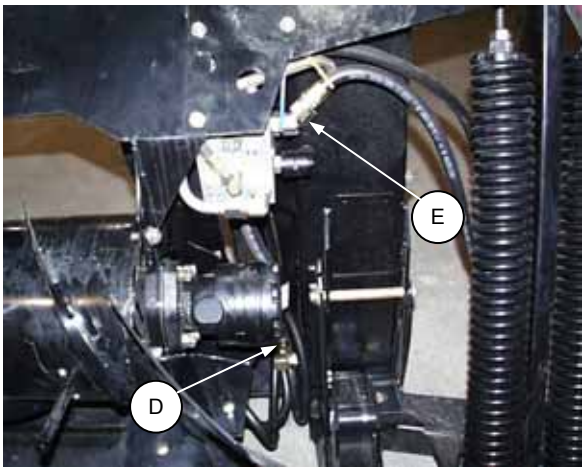

LEFT HYDRAULIC RESERVOIR

Hydraulic Oil Filter

Change hydraulic oil filter (C) after the first 50 hours operation and every 250 hours thereafter:

1. Clean around the filter head.
2. Remove the filter and clean the gasket surface of the filter head.
3. Apply a thin film of clean oil to the gasket on the new filter.
4. Install the new filter. Turn the filter onto the mount until the gasket contacts the filter head. Tighten the filter an additional 1/2 to 3/4 turn by hand.

IMPORTANT: Do not use a filter wrench to install the filter. Over-tightening can damage gasket and filter.

HYDRAULIC SYSTEM (continued)

Flow Control Relief Pressure

The valve on the combine adapter has three relief valves for the following functions:

(R1) – 3500 psi (24.1 Mpa) – Feed Draper and Drum in reverse.

(R2) – 3200 psi (22.1 Mpa) – Feed Draper and Drum in forward.

(R3) – 2500 psi (17.2 Mpa) – Header Side Drapers.

A possible cause of insufficient draper/drum speed is low relief pressure.

WARNING: To avoid bodily injury from bursting hoses and/or exploding components, do not continue closing needle valve if pressure reading exceeds recommended pressure by more than 150 psi (1.0 Mpa).

To check header side draper relief pressure:

1. Detach draper drive hoses between adapter and header. Connect orange to blue at header for storage.
2. Attach a test fixture consisting of a 5000 psi (34.5 Mpa) pressure gauge and needle valve between the orange colour coded hose and the blue fitting at (A) on adapter. Locate the needle valve closest to the valve block.
3. Set flow control knob (B) to maximum (number 9 on dial).
4. Run combine engine at operating speed.
5. Engage header drive.
6. Close needle valve until flow stops. Pressure reading should be 2500 psi (17.2 Mpa).
7. Adjust relief pressure at valve (R3) as required.

To adjust relief valves (R1), (R2) or (R3):

- Loosen jam nut on relief valve.
- Turn relief screw until relief pressure is correct.
- Tighten jam nut.

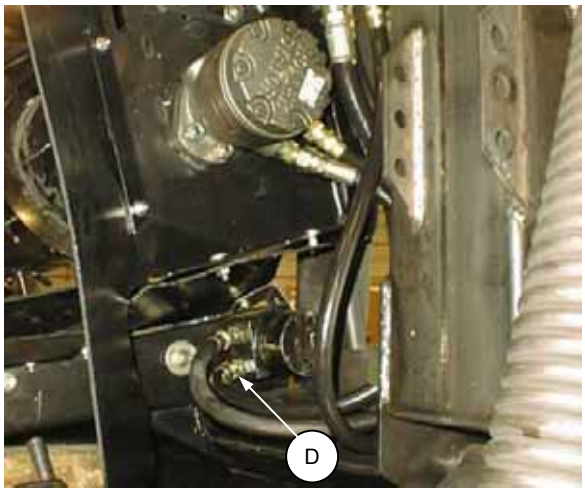

READ GAUGE HERE FOR VALVE R1

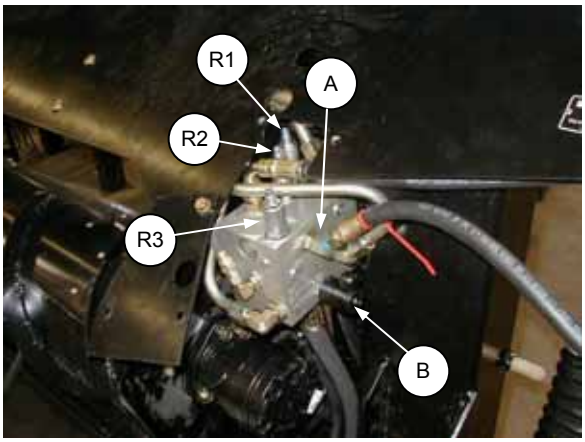

RELIEF VALVES –
READ GAUGE AT (A) FOR VALVE R3

To check adapter drum & feed draper relief pressure:

1. Attach a test fixture consisting of a 5000 psi (34.5 Mpa) pressure gauge and needle valve between the hose and the lower port of the feed draper motor at (D). Locate the needle valve closest to the motor.
2. Attach a 5000 psi (34.5 Mpa) pressure gauge to service port in tee fitting at (E).
3. Run combine engine at operating speed and engage feeder house drive in ***forward***.
4. ***Close*** needle valve until flow stops. Pressure reading at pump (E) should be 3200 psi (22.1 Mpa).
5. Adjust relief pressure at valve (R2) as required.
6. Open needle valve.
7. Disengage feeder house drive and reengage in ***reverse***.
8. ***Close*** needle valve until flow stops. Pressure reading at draper motor (D) should be 3500 psi (24.1 Mpa).
9. Adjust relief pressure at valve (R1) as required.
10. Adjust sequence valve if required. See pg. 28.

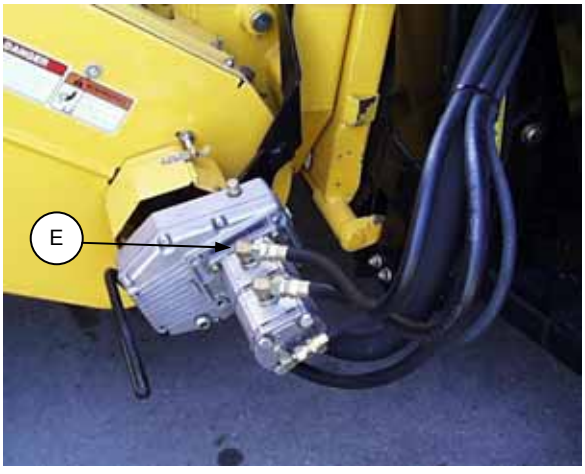

READ GAUGE HERE FOR VALVE R2

HYDRAULIC SYSTEM (continued)

To check sequence valve operation:
If adapter drum and feed draper circuit relief pressures check out to specification as described on previous page, but these pressures are not reached under field operating conditions, check the operation of the sequence valve (A) in the valve block as follows:

1. With test fixture installed between the hose and the lower port of the feed draper motor at (D) as on previous page, run combine engine at operating speed and engage feeder house drive in ***forward***.
2. With needle valve ***open***, pressure reading at (D) should be 60 psi (4.22 KPa) or less.
3. If reading is 60 psi or less, and correct operating relief pressures cannot be reached, replace sequence valve (A).
4. If pressure reading is above 60 psi, there may be a flow restriction in one of the hydraulic lines or hoses. Check for signs of crimping or collapsing and correct.



SEQUENCE VALVE

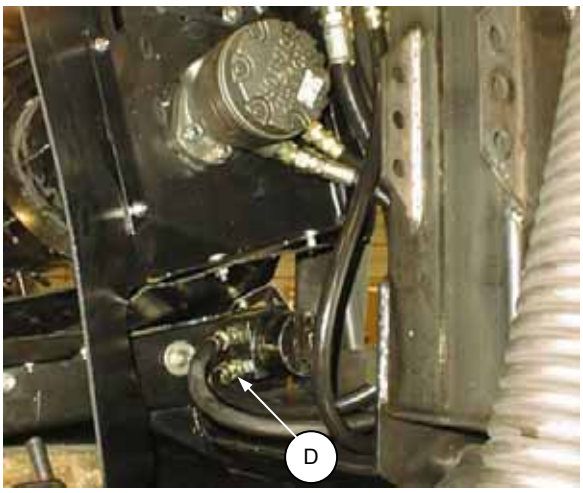

READ GAUGE HERE FOR SEQUENCE VALVE

GEARBOX LUBRICATION

Change gearbox oil every 1000 hours or 3 years.

Box capacity: 450 mL (15 U.S. oz.)

Lubricant: SAE 85W-140 gear lube (API Service Classification GL-5).

Check lubricant level with top of box close to horizontal as shown. Level should be in middle of sight glass.

Breather plug – (B) Level sight glass – (L) Drain plug – (P) Fill plug – (F)

NOTE: Tighten plugs to 135 in. lbs. (15.25 N.m)
Tighten Allen screws (G) securing pump to gearbox to 14 ft-lbs (20 N.m)

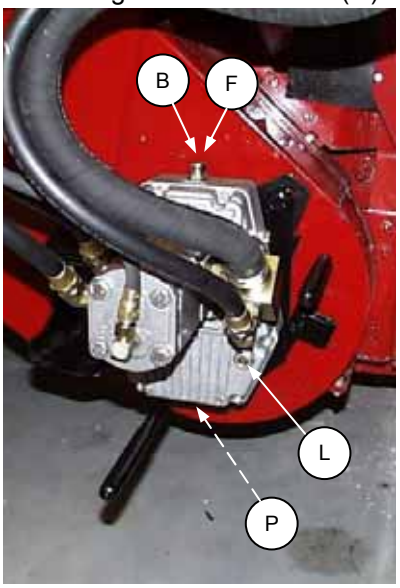

GEARBOX PLUGS – CASE 2300 SERIES & JD Level Land Prior to 50 Series

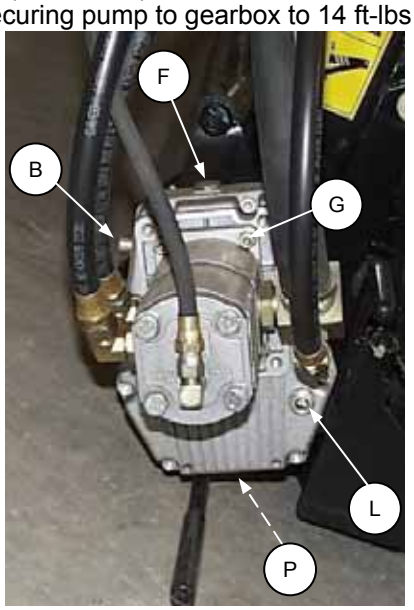

GEARBOX PLUGS – CASE AFX, NH, GL JD Contour Master & 50 Series Level Land

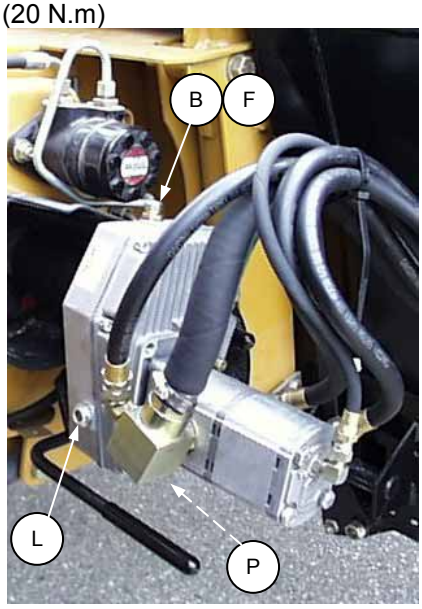

GEARBOX PLUGS – LEXION

RETRACTING TINE DRUM

Tine Pitch Adjustment – Tines should be fully extended on the front side of the drum and full retracted on the rear (feeder house) side.
Tine pitch can be adjusted to change the aggressiveness of the tines. More aggressive tine pitch means the tines stay extended for longer as they approach the feed chain on the combine. Less aggressive means the tines retract sooner.

IMPORTANT: Always maintain a minimum 3/8" (10 mm) clearance to header and feed draper with top link fully retracted and header floated up.

To adjust tine pitch, reposition bolts (A) in cam plate at right side of adapter. Angling the cam plate further up at the front decreases tine aggressiveness. Angling the cam plate down at the front increases tine aggressiveness.

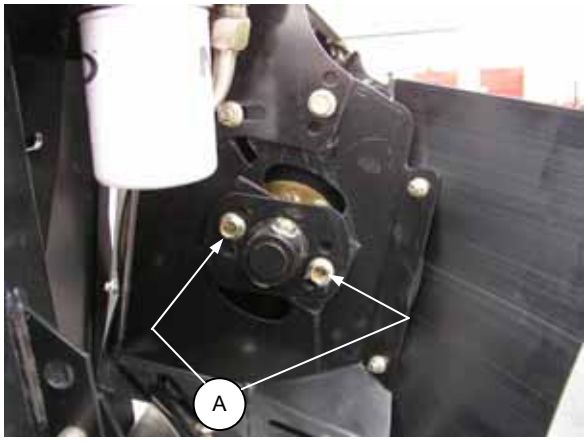

TINE PITCH ADJUSTMENT

Tine Installation – Depending on deck size, some tines may have been removed from the drum at the factory to suit the recommended header side draper opening size. Should header opening be widened to suit bulky crops, install tines on outer ends of drum as required to aid feeding. Always check clearances after adding tines, and maintain 2" (50 mm) gap from tines to side drapers. When adding or replacing tines, install hair-pin (C) as shown, with head leading in direction of drum rotation and clamping side of pin inboard. Tighten plastic guide hardware to 75 in. lbs. (8.47 N.m).

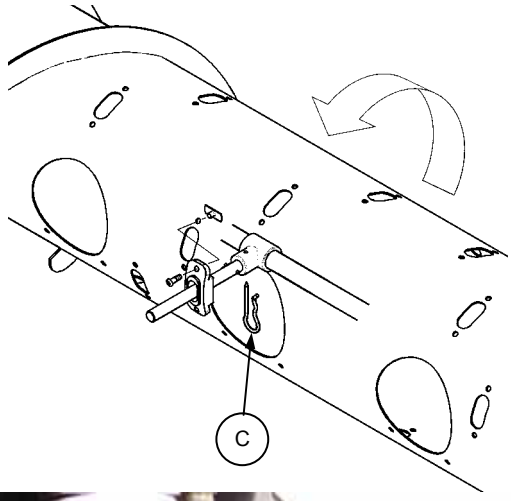

Drum Fore-Aft Adjustment – Drum has been shipped in the proper fore-aft range for your combine. See chart on page 45. To adjust drum fore-aft position within this range, loosen two mounting bolts (B) each side. Remove mounting bolt for plastic deflector (rear bolt for 56" decks & forward bolt for 38" & 45" decks). Loosen the second deflector mounting bolt (both sides) and place deflector bolt in appropriate hole as shown in chart on page 45. Tighten all deflector hardware. In general, there should be 1 to 2 inches (25 to 50 mm) clearance between adapter drum and combine feed drum, with combine feed drum floated up.
NOTE: For best performance, dust shields should be removed from combine whenever possible. If dust shields are not removable, adapter drum should be within 1/4 to 3/4 inches (6 to 19 mm) of the dust shield.

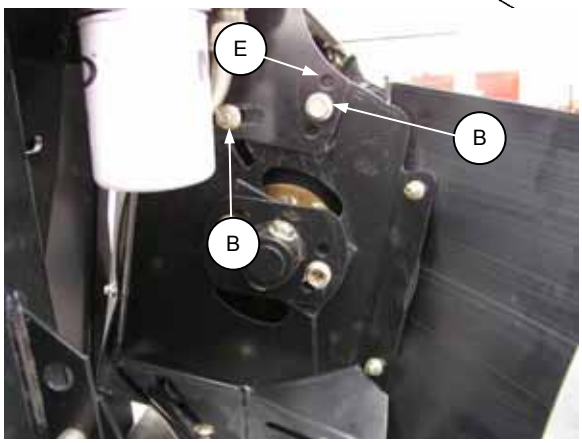

DRUM FORE-AFT ADJUSTMENT

IMPORTANT: To prevent damage to drum or feed draper, always check drum clearance to header frame and feed draper after adjusting header angle. Flattening the header angle will reduce the clearance to the drum fingers. Maintain a 3/8" (10 mm) clearance with top link fully retracted and header floated up.

Windrowing – When laying a windrow out the end of the header, move the drum back to clear header backsheet when it is moved across the center opening. In some cases it will also be necessary to remove one row of tines from drum to provide adequate clearance.
For a complete list of steps to convert to windrowing mode, see "End Delivery" in the Operation section of your Header Operator's Manual.

NOTE: For 963, 973 and 974 Headers only, if plugging occurs between drum and feed draper in bulky crops, drum may be raised to upper hole (E) in frame. Float down stop must be in Position 2 (973/974) if making this adjustment. See page 39. Check drum clearance to header frame after adjusting drum height.

MAINTENANCE/SERVICE

MAINTENANCE SCHEDULE

The following maintenance schedule is a listing of periodic maintenance procedures, organized by service intervals. For detailed instructions, see the specific headings in Maintenance/Service section. Use "Recommended Lubricants" as specified under that heading.

Service Intervals

The recommended service intervals are in hours of operation. Use the hour meter in the combine to indicate when the next service interval has been reached.

IMPORTANT: Recommended intervals are for average conditions. Service the adapter more often if operated under adverse conditions (severe dust, extra heavy loads, etc.).

Regular maintenance is the best insurance against early wear and untimely breakdowns. Following this schedule will increase machine life.

Where a service interval is given in more than one time frame, e.g. "100 hours or annually", service the machine at whichever interval is reached first.



CAUTION: Carefully follow safety messages given under "Service Procedures".

AT FIRST USE: See "Break-In Period" in Operation section.

---

10 HOURS OR DAILY
1. Check hydraulic hoses, lines and components for leaks

---

25 HOURS
1. Check hydraulic oil level at reservoir

---

100 HOURS OR ANNUALLY *
1. Grease drum bearing
2. Grease feed draper idler roller bearings
3. Grease feed draper drive roller bearing
4. Grease lower link pins
5. Check gearbox lubricant level

---

250 HOURS
1. Change hydraulic oil filter

---

500 HOURS OR ANNUALLY *
1. Change feed draper roller bearings

1000 HOURS OR 3 YEARS
1. Change hydraulic oil in reservoir
2. Change gearbox lubricant

* - It is recommended that Annual Maintenance be done prior to start of operating season.

MAINTENANCE RECORD

Adapter Serial No. _____

Combine this record with the record in the Header Operator's Manual.
See Maintenance/Service section for details on each procedure. Copy this page to continue record.

	ACTION: ✓ - Check ♦ - Lubricate ▲ - Change																				
	Hour Meter Reading:																				
	Serviced By:																				
	Maintenance Procedure																				
	BREAK-IN	See "Break-In Period" in Operation section for checklist.																			
	10 HOURS OR DAILY																				
✓	Hydraulic Hoses and Lines																				
	25 HOURS																				
✓	Hydraulic Oil Level																				
	100 HOURS OR ANNUALLY																				
♦	Drum Bearing																				
♦	Feed Draper Idler Roller Brgs.																				
♦	Feed Draper Drive Roller Brg.																				
♦	Lower Link Pins																				
✓	Gearbox Lubricant Level																				
	250 HOURS																				
▲	Hydraulic Oil Filter																				
	500 HOURS OR ANNUALLY																				
▲	Feed Draper Roller Bearings																				
	1000 HOURS OR 3 YEARS																				
▲	Hydraulic Oil																				
▲	Gearbox Lubricant																				

TROUBLESHOOTING

SYMPTOM	PROBLEM	SOLUTION	REF.
HYDRAULICS			
Insufficient draper speed.	Speed control set too low.	Increase control setting.	17
	Relief pressure too low.	Increase relief pressure to recommended setting.	30
	Combine header drive too slow	Adjust to correct speed for combine model	*
FEEDING			
Adapter drum back-feeds.	Dust shield on front of feeder house.	Remove dust shield. Adjust drum position towards feeder house.	32
	Drum tine pitch too aggressive, not releasing crop.	Decrease tine pitch aggressiveness at cam plate.	32
	Side drapers running too fast, piling material in center of feeder draper.	Reduce header side draper speed.	17
	Adapter drum too far from front drum of feeder house.	Swing drum back or move feeder house drum forward. (Check clearance with feeder house drum fully floated.)	32 **
	Build-up of material at corners of feeder house.	Adjust feeder deck rear deflectors to eliminate corners.	41
	Improper header delivery opening.	Cut or add to header side drapers for proper opening.	***
	John Deere: Feeder chain running too slow.	Run feeder chain at high speed.	*
	John Deere: Equipped with feeder chain with 4 pitches per bar.	Replace with 6 pitch per bar feeder chain, or remove every other bar.	*
	Case, NH: Feeder house face plate set too steep.	Adjust feeder house face plate.	50
	Case: Stone retarding drum installed, or smooth feeder chain bars installed.	Install standard drum or fill slots in stone retarding drum, or install serrated feed chain bars.	****
	NH-TR, Lexion: Stone ejection roll set too low.	Adjust roll position.	*
Hesitation in flow of bulky crop.	Header angle too flat.	Steepen header angle.	23
	Reel too far back.	Move reel forward on support arms.	***
	Header opening too small. Bulky crop is “bridging” across opening.	Widen header opening and install outer tines in drum.	23
	Case: Stone retarder blocks interfering with crop flow.	Adjust blocks to minimum height.	**
	Side drapers running too fast, piling material in center of feeder draper.	Reduce header side draper speed.	17
	Feed chain drum too low.	Move drum to corn position.	**
	Adapter drum too low.	Move drum to raised position on adapter frame. **(Not for 972 Header)**	32
	Install upper cross auger on header.	See header Operator’s Manual.	***

* See “Preparing the Combine” under Mounting Instruction for your Combine Manual at back of this book
** See your Combine Manual / *** See your Header Operator’s Manual / **** See your Combine Dealer

TROUBLESHOOTING

SYMPTOM	PROBLEM	SOLUTION	REF.
FEEDING (continued)			
Adapter drum wraps crop.	Crop susceptible to wrapping. E.g. flax	Adjust drum tine pitch to decrease aggressiveness	32
	Gleaner: Poly side panels set too wide.	Narrow the opening by moving poly panels to achieve 930 mm opening.	41
Feed chain jumping.	Gleaner: Poly side panels set too wide.	Narrow the opening by moving poly panels to achieve 930 mm opening.	41
Crop backs up or hesitates on feed draper.	Feed chain drum too low.	Move drum to corn position.	**
	Heavy crop plugging between adapter drum and feed draper.	Move drum to raised position on adapter frame. **(Not for 972 Header)**	32
	Insufficient RTD speed caused by:		
	Relief pressure too low.	Increase relief pressure to recommended setting.	30
	Sequence valve or relief valve malfunction.	Replace sequence or relief valve or repair cause of flow restriction.	31
	Recommended relief setting too low.	Increase relief to 3400 psi.	30
	See also" Adapter drum back-feeds", pg. 32		
Crop back feeds on center feed draper	Excessive clearance from combine feed drum to adapter feed draper.	Add feeder chain links to achieve less clearance between combine feed drum and adapter feed draper. To prevent damage, ensure a 1-2" (25-50 mm) clearance between combine drum and adapter drum. (Combine drum floated up).	**
Side drapers back-feed.	Side drapers running too slow in heavy crop.	Increase draper speed.	17
	Adapter drum tines too close to header side drapers.	Remove tines at ends of drum to maintain 2" (50 mm) gap to draper.	32
	Side drapers improperly set with respect to feed draper.	Set draper opening for width of adapter.	***
	Adapter drum too low.	Move drum to raised position on adapter frame. **(Not for 972 Header)**	32
Crop is thrown across opening and under opposite side draper.	Side drapers running too fast in light crop.	Reduce draper speed.	17
	Excessive overlap of feeder draper.	Center side draper drive rollers over feed draper side deflectors.	***
Hesitation in crop flow at sides of feeder house.	Rear deflector fins set too wide.	Set side deflectors narrower.	41

** - See your Combine Operator's Manual. / *** See your Header Operator's Manual.

TROUBLESHOOTING

SYMPTOM	PROBLEM	SOLUTION	
FLOTATION			
Combine feeder house pushes dirt when trying to pick up downed crop.	Feeder house lowered too far, eliminating header float.	Raise feeder house float linkage bottoms, change header to steeper angle to pick up downed crop.	20
	Down stop in upper holes.	For 973/974 Only: Move down-stop down to position 1 and RTD to lowest position.	39
	Float too light, header legs do not rest on stops.	Adjust to heavier float.	18
Cutterbar does not float or pushes dirt.	Float set too heavy.	Adjust to lighter float.	18
	Float lockout not disengaged.	Raise header, disengage float lockout.	10
Float assembly binding	Adapter feed pan too far forward at cutterbar.	Adjust feed pan engagement at cutterbar.	12
VIBRATION			
Excessive vibration of adapter and header.	Adapter feed pan positioned too far forward to cutterbar on 972/973/974 or too far back of cutterbar on 963.	Adjust feed pan engagement at cutterbar.	12

** - See your Combine Operator's Manual. / *** See your Header Operator's Manual.

FLOAT OPTIMIZER

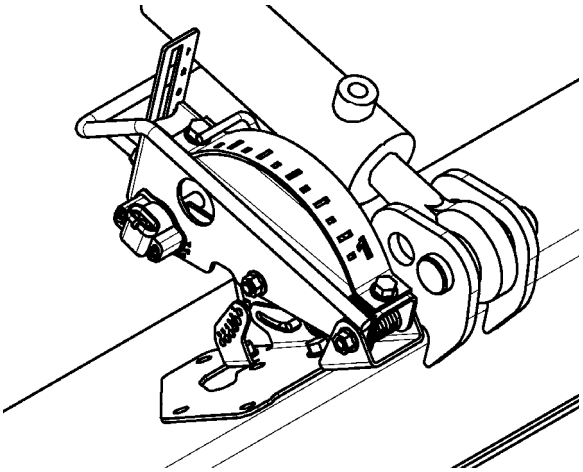

WholeGoods order no:

B4415 – Case 2300 Series and AFX
B4498 – New Holland CR/CX
B4499 – John Deere 50/60 Series, Gleaner, Massey Ferguson & Challenger
B4500 – John Deere prior to 50 Series
B4416 – Lexion

For use in conjunction with Auto Header Height Control option on Case, New Holland, John Deere and Gleaner combines, and with the Header Flotation option on Lexion combines. This attachment includes a potentiometer that sends a signal to the combine to allow maintaining a consistent cutting height and optimum adapter float as the header follows ground contours.

VISUAL FLOAT INDICATOR

WholeGoods order no: B4502

Provides the operator with a visual indication that the cutterbar is on the ground and the header is in a "floating" condition. Similar to Float Optimizer above, but without potentiometer for auto height control.

Preparing the Adapter

1. Remove shipping brace (painted yellow) and parts strapped to adapter.
2. For proper function of header and adapter (floatation, feeding etc.), the combine adapter float arrangement must be adjusted to suit your Combine and Header model combination. Where possible, the adapter has been shipped in the proper configuration for your combine. Check to be sure the settings match the chart below:

HEADER	COMBINE	ADAPTER LEG	DOWN STOP	
			PIN	PAD
963 / 972	Case 2300 Series CNH – AFX NH – CX/CR* Lexion, Gleaner, Massey Ferguson & Challenger John Deere*	A	3	D
	John Deere** NH – CX/CR**	B	3	F
973	Case 2300 Series CNH – AFX NH – CX/CR* John Deere* Lexion, Gleaner, Massey Ferguson & Challenger	A	2	D
	John Deere** NH – CX/CR**	B	2	D
974	Case 2300 Series CNH – AFX NH – CX/CR* John Deere* Lexion, Gleaner, Massey Ferguson & Challenger	A	2	E
	John Deere** NH – CX/CR**	B	2	E

NOTE: Regarding combine dust shields:

- Dust shields on Case, Gleaner and Lexion Combines should be removed, but may remain installed. Settings given do not change with shields removed.
- New Holland Combines should have dust shields removed. Settings change as indicated in chart:
  * John Deere & NH – CX/CR with dust shields removed
  ** John Deere & NH – CX/CR with dust shields
  NOTE: John Deere Contour Master dust shields cannot be removed.

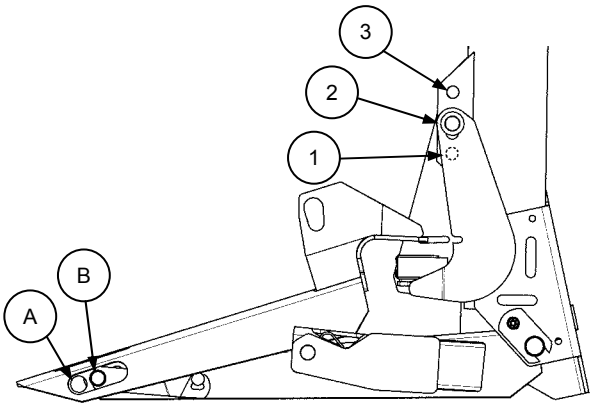

ADAPTER LEG &
DOWN STOP PIN POSITIONS

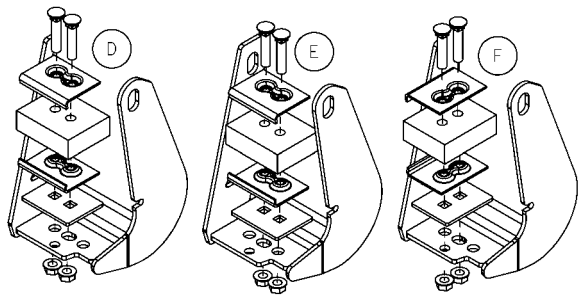

DOWN STOP PAD ORIENTATION
(L/H SUPPORT SHOWN)
D – Inboard set of side-by-side holes
E – Outboard set of side-by-side holes
F – Fore-aft set of holes (plate flanges inboard)

Preparing the Adapter (cont'd.)

3. **For 21' & 25' headers**, float may be excessive even at the heaviest setting. It is recommended to remove the inner spring from the outer float spring assembly on each side as follows:
   - Note the length of exposed thread on spring drawbolt (B).
   - Loosen jam nut (A).
   - Loosen spring drawbolt (B).
   - Remove lower pin from spring assembly.
   - Remove spring drawbolt (B).
   - Remove upper spring insert, inner spring and insert at (C).
   - Replace upper spring insert with insert (D) (with threaded hole). Order #24322.
   - Reassemble float spring and install float lockout pin as below.
   - Tighten float spring bolt to original exposed thread setting.

   NOTE: If float is still too light after removing spring from the two outer assemblies, repeat procedure for the inner spring assembly, both sides. Two more of item (D) spring insert #24322 will be required.

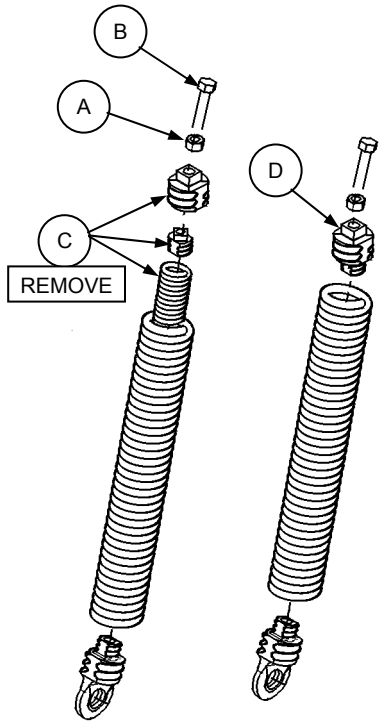

DOUBLE SPRING ASSEMBLIES (AS SHIPPED)

MODIFIED 21' & 25' SPRING ASSEMBLIES

4. The adapter float spring lower pins and float lockout pins have been shipped in position (G) and (J) respectively (except export headers), to properly orient legs for driving into model 963, 973 or 974 Headers.

   For 972 Headers only:
   NOTE: *It is highly recommended that the upgrade package for rubber isolated linkage pockets be added to 972 header legs. If this package is not installed, prior to attaching to header, perform the following additional adjustments in addition to the adjustments made per page 39:*
   - Loosen off float spring bolts after taking note of original exposed thread length.
   - Move lower pins to position (H).
   - Move float lockout pins to position (K).
   - Repeat at other side.
   - Tighten float spring bolts to original exposed thread setting.
     NOTE: This higher position (H) of lower float pins may cause interference between RTD and feed draper. Move RTD to a higher position as described on page 45.

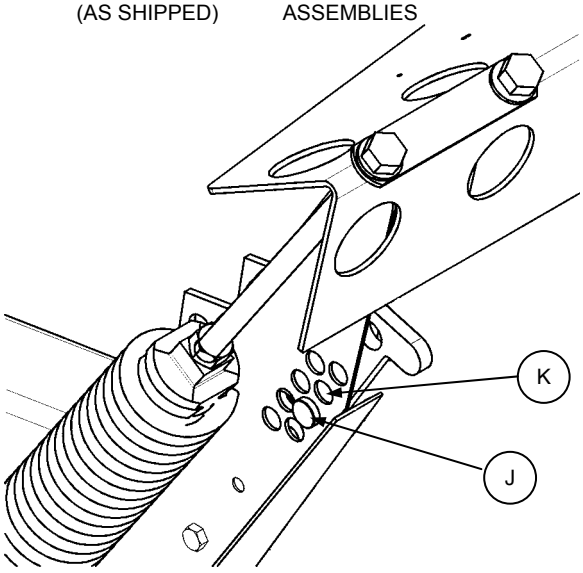

MOVE FLOAT LOCKOUT PINS
972 HEADER ONLY (without rubber isolators)

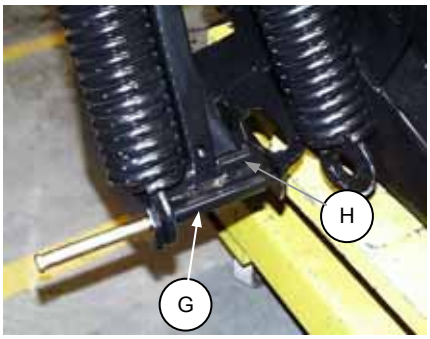

CHANGE FLOAT SPRING PIN POSITION
972 HEADER ONLY (without rubber isolators)

Preparing the Adapter (cont'd.)

5. Install pump in storage position at slot in right hand float spring support and secure with lynch pin at (L).

CAUTION: Wear gloves when handling pump.



STORE PUMP ON ADAPTER FRAME

CHECK DECK DEFLECTOR POSITION

NOTE: Side deflectors (A) are factory set for an opening width (distance between deflectors (A), to correspond to the feeder house opening for a specific model of combine, according to the following chart.

The rear vertical edge of deflectors (A) should just fit inside feeder house opening. If factory setting is not correct for your model of combine, loosen bolts (C) (five per side) and adjust rear of deflector to suit feeder house opening.

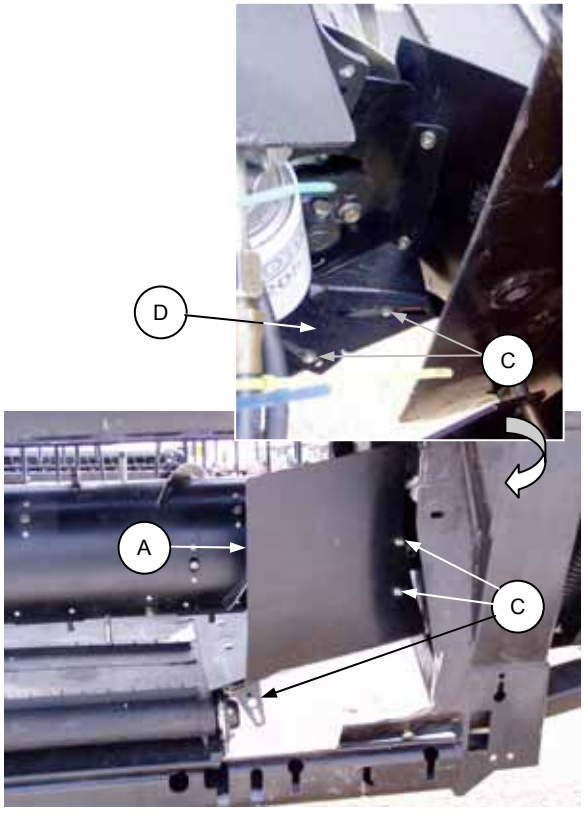

SIDE DEFLECTORS

COMBINE MAKE & MODEL	REAR DEFLECTORS OPENING WIDTH*
Case 60 & 66 Series	36.6" (930 mm)
Case 77, 80 & 88 Series	46.5" (1180 mm)
Case AFX	49.2" (1250 mm)
JD 50 Series (except 9650) & Contour Master (9500, 9510, CTS & CTS II)	55.9" (1420 mm)
JD 9600, 9610, 9650	59" (1500 mm)
New Holland CR 920/940/960	36.6" (930 mm)
New Holland CR 970/980	49.2" (1250 mm)
New Holland CX	59" (1500 mm)
Lexion 450, 460R, 470, 470R, 475, 560, 560R, 570R, 575R, 580 & 580R	49.2" (1250 mm)
Lexion 460, 465, 480, 480R, 485, 485R & 590R	59" (1500 mm)
Gleaner	39.4" (1000 mm)
Challenger 660, Massey Ferguson 9690	44.1" (1120 mm)
Challenger 670, Massey Ferguson 9790	55.1" (1400 mm)

* Measured at height of bracket (D).

Preparing the Adapter (cont'd.)

INSTALL FEED DRAPER

1. Pull front of plastic panel up and back, well away from idler roller and tightener mechanism.
2. Loosen nut (G), both sides, and pull up on idler roller to rotate to position (A). Nut (G) must be loose enough that idler arm easily passes by adjusting rod (J).
   NOTE: Rod (J) may come out of position when lifting idler roller. It will return to proper position when roller is moved to working position (B). Try moving idler roller from position (A) back to working position (B). If roller does not pivot over, loosen nut (G) further. When nut (G) is properly loosened, pull roller up to position (A) for installation of draper.
3. Install feed draper on adapter rollers, ensuring belt on underside seats properly on left side of both rollers.
4. Pre-install screws (F) in connector slat. Screws fit tightly into slat holes. To install, support slat on both sides of hole and hammer screw into hole. Position connector slats (D) as shown below with heads leading in direction of travel.

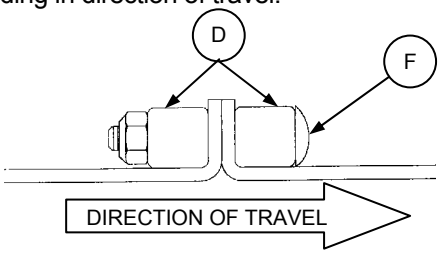

FEED DRAPER CONNECTION

5. Apply draper tension as follows:
   a. With nut (G) loosened per step 2, swing roller from position (A) to working position (B), standing on ends of roller if necessary. Take care not to damage roller or draper seal.
   b. Back off nut (H) and adjust position of nut (C) to align bracket with welded channel as shown. This position provides proper spring tension. Tighten nut (H) against nut (C) to secure the position. Repeat at other side.
   c. Tighten nut (G), both sides, ensuring that formed end of adjusting rod seats properly in pocket formed into idler arm and that rod is positioned at bottom of cut-out in side of pan.
6. Attach front end of plastic panels to front of feed deck with four screws provided (two per side, heads on top).
   IMPORTANT: Panel hardware should not be over tightened. Tighten locknuts to close gap between plastic panel and feed deck flange, yet still allow screw to move in flange slot.

INSTALL SKID/TRANSITION PLATE – 963 HEADER

Attach skid/transition plate to adapter feed pan, using 1/2 x 1 inch carriage bolts and flange nuts as shown. Position hardware at rear of slots and leave finger tight. When attaching to header, adjust skid/transition plate to suit your combine make and model as described on page 12.



LOOSEN IDLER ROLLER HARDWARE

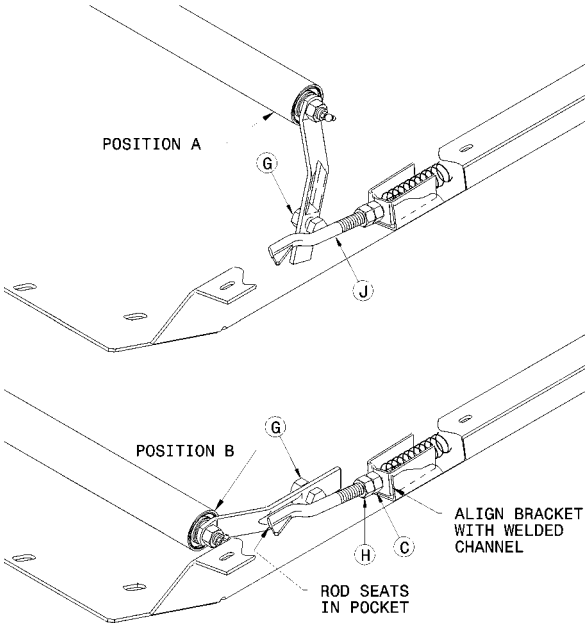

APPLY DRAPER TENSION

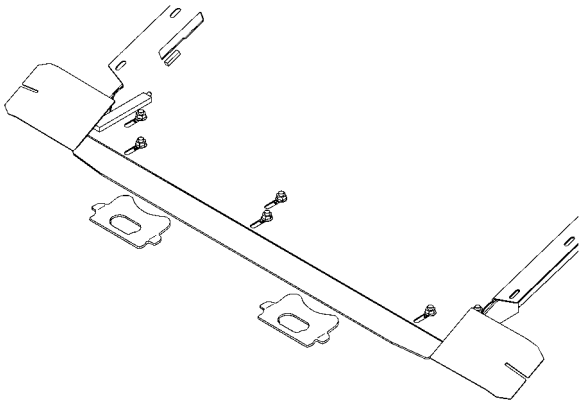

INSTALL SKID/TRANSITION PLATE – 963

Preparing the Adapter (cont'd.)

INSTALL SKID/TRANSITION PLATE ON ADAPTER FEED PAN – 972/973/974 HEADERS

Attach pan (K), spacer plate (L) and top deflector (P) to adapter feed pan as follows:

1. Assemble as shown, with spacer plate (L) between pan (K) and adapter feed pan.
2. Position pan (K) to achieve dimension (X) shown in chart. When attached to header, this setting should result in 3/16" (5 mm) clearance to cutterbar. (See page 12.) Readjust if necessary after hook-up.
3. Attach pan (K) to adapter feed pan at three rear holes (N) and at side walls (R), using five 1/2 x 1" carriage bolts and lock nuts. Position bolt heads under pan at (N) and inboard at (R). Tighten these bolts.
4. Position top deflector (P) to achieve 35 mm clearance to feed draper and install 1/2 x 1-1/4" carriage bolts and lock nuts at three front holes (M).
5. **NOTE:** Spacer plate (L) can be repositioned if more clearance to header drapers is required. See page 24.
6. Once skid/transition plate is properly positioned and all hardware is tight, bend outer corner tabs of pan (K) up to achieve a 3 to 5 mm (1/8 to 3/16") gap between tab and feed pan side flange as shown below. This acts as a hold-down for plastic panel (S).

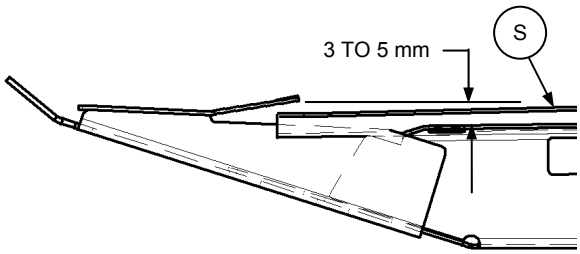

BEND TABS UP TO CAPTURE PLASTIC

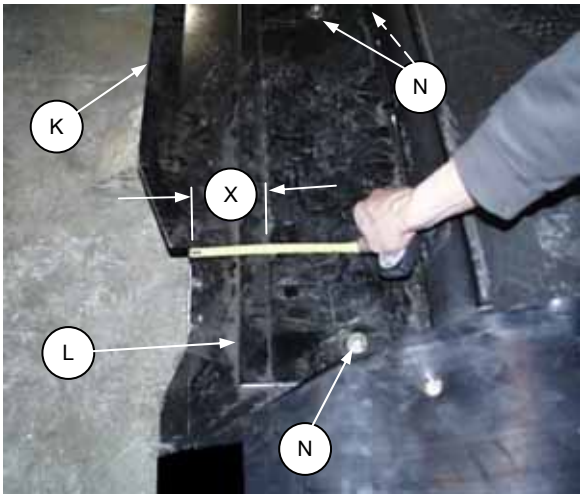

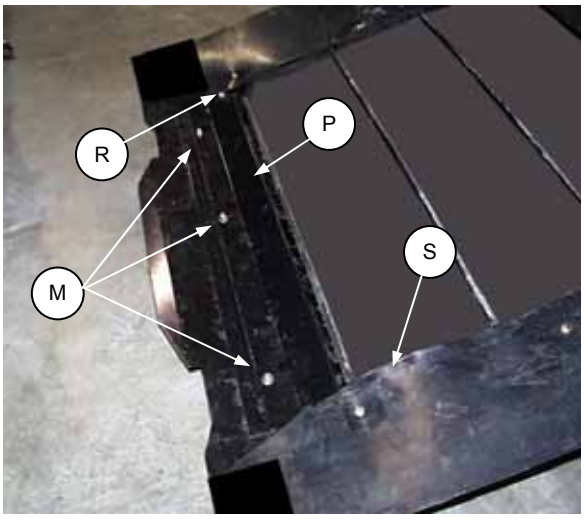

INSTALL SKID/TRANSITION PLATE
972/973/974

Combine Make & Model	Header Model	Dimension X
Case 2100/2300 Series & Case AFX	972/973/974	3-1/2" (90 mm)
New Holland CR/CX with dust shields	972/973/974	4-11/32" (110 mm)
New Holland CR/CX w/o dust shields	972/973/974	3-1/2" (90 mm)
Lexion	972/973/974	3-1/2" (90 mm)
Gleaner, Massey Ferguson & Challenger	972/973/974	3-1/2" (90 mm)
John Deere with dust shields	972/973/974	4-11/32" (110 mm)
John Deere w/o dust shields	972/973/974	3-1/2" (90 mm)

NOTE: For 963 Header skid/transition plate settings, refer to page 12.

Preparing the Adapter (cont'd.)

ATTACH CENTER LINK

For mechanical center link (G), attach to adapter frame with clevis and lynch pins as shown, with locking collar (H) forward and pointing upward.

As a starting point, set the link length to 19-1/4" (490 mm) pin-to-pin. (Approximately 1-3/8" (35 mm) of thread showing at each end).

IMPORTANT: For both mechanical and hydraulic center link, attach to rear hole on adapter mounting lug for all combines except the following:

- All John Deere and New Holland Combines where dust shields remain installed.
- All combines with 963 Header

These use the front hole. Damage to header side drapers or adapter drum may occur if installed in the back hole with these combines and headers.

For units with hydraulic center link, see "Preparing the Header", page 49

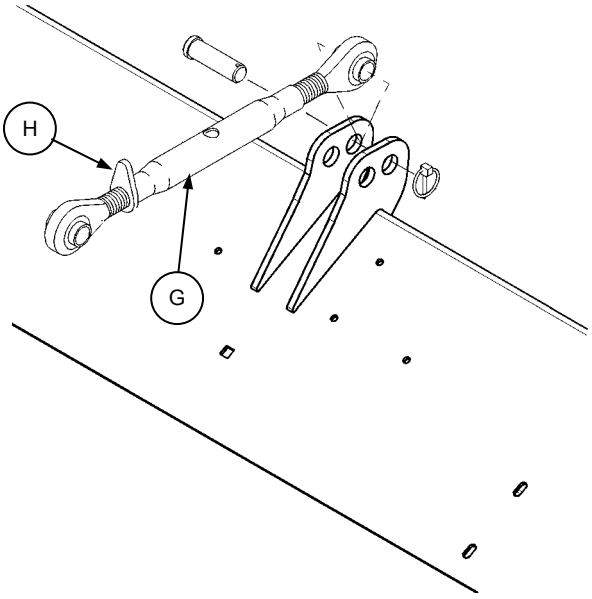

MECHANICAL CENTER LINK –
- FORWARD HOLE FOR JOHN DEERE & NEW HOLLAND (With dust shields)
- FORWARD HOLE FOR ALL COMBINES with 963
- REAR HOLE ALL OTHERS

RETRACTING TINE DRUM FINGERS

IMPORTANT: Drums are shipped with the minimum number of fingers installed to ensure damage to header is avoided.With opening sizes required for some combines, it will be necessary to add fingers to each end of retracting tine drum. In the chart at right, unshaded listings are "As Shipped" and require no modification at set up. Shaded listings require addition of tines to each end at set-up, prior to operating the header.

COMBINE MAKE & MODEL	# OF TINES
Case 60 Series	19
Case 77, 80 Series	21
Case AFX	23
JD 50/60 Series (except 9650) & Contour Master (9500, 9510, CTS & CTS II)	29
JD 9600, 9610, 9650, 9660	29
New Holland CR 920/940/960	19
New Holland CR 970/980	23
New Holland CX	29
Lexion 450, 460R, 470, 470R, 475, 560, 560R, 570R, 575R, 580 & 580R	23
Lexion 460, 465, 480, 480R, 485 & 485R	29
Gleaner	19
Challenger 670, Massey Ferguson 9790	27
Challenger 660, Massey Ferguson 9690	19

Preparing the Adapter (cont'd.)

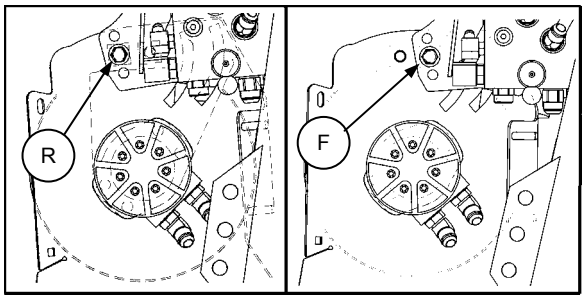

RTD FORE-AFT RANGES

POSITION THE RETRACTING TINE DRUM

Adapters are shipped with drum mounted in the proper fore-aft range (R) or (F) for your make and model of combine, As well, the proper fore-aft position is factory set at dimension (X) **(reference only)** shown in chart below (except for JD Contour Master). This is measured from the front side of the panel that mates with the feeder house face plate to the center of the drum. This position ensures clearance to the combine feeder house.

IMPORTANT: For best performance, when adapter is attached to combine, ensure that clearance between adapter drum and combine feed drum ranges from 1 to 2 inches (25 to 50 mm), *with combine feed drum floated up*. Rotate adapter drum rearward if required to achieve this dimension. After rotating drum, if Dimension X > 8.5" then locate RTD in holes (F). If Dimension X < 8.5" then locate RTD in holes (R).

NOTE: Feeding problems may occur if RTD is rotated forward of the dimensions shown in chart for your combine due to the plastic closure panels not fitting properly.

For 972 Headers: If lower float spring pins are moved to upper position as described on page 40, relocate RTD to position (N).

For JD Contour Master rotate drum forward so X = 10.6" (270 mm) to clear welded dust shields. Do not tighten bolt (M) until combine is attached to adapter. Adjust float handle to limit float as described on the next page. See Adapter Mounting Instruction for John Deere combines at the back of this book for other modifications required for Contour Master Combines.

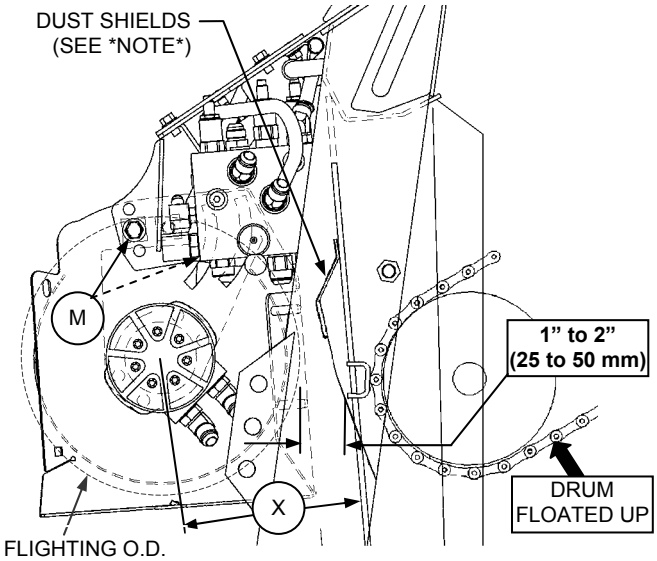

RTD POSITIONING

To adjust drum fore-aft position, loosen two mounting bolts (M) each side and swing drum fore-aft in rear slot. Tighten bolts to secure the position and remove bolt from hole listed in chart. Place bolt in new hole after adjusting drum.

***NOTE*:** For all combines, removable dust shields must be removed before operating. For other combines, dust shields may remain installed with factory fore-aft setting of the retracting tine drum. However, if feeding problems are encountered, remove dust shields and move drum closer to combine feed drum.

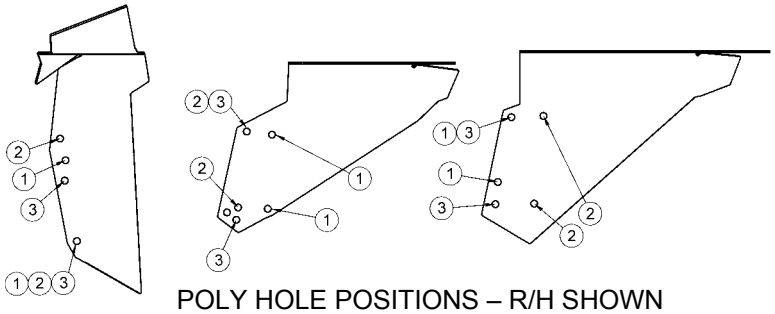

POLY HOLE POSITIONS – R/H SHOWN

Poly	Hole	Combine Make & Model	Fore-Aft Range	Dimension X (factory settings)
C	3	Case 60 Series	R	8.1" (205 mm)*
B	3	Case 77 & 80 Series	R	8.1" (205 mm)*
B	2	CNH AFX	R	8.5" (215 mm)*
A	1	New Holland CX with dust shields	F	8.9" (225 mm)
B	1	New Holland CR 970, 980 with dust shields	F	8.9" (225 mm)
B	3	New Holland CR 970, 980 w/o dust shields	R	8.1" (205 mm)
C	1	New Holland CR 920, 940, 960 with dust shields	F	8.9" (225 mm)
C	3	New Holland CR 920, 940 & 960 w/o dust shields	R	8.1" (205 mm)
A	2	New Holland CX w/o dust shields	R	8.1" (205 mm)**
B	2	Lexion 450, 460R, 470, 470R, 475, 560, 560R, 570R, 575R, 580, 580R	R	8.3" (210 mm)*
A	2	Lexion 460, 465, 480, 480R, 485, 485R & 590R	R	8.3" (210 mm)*
A	3	John Deere (except Contour Master)	F	9.5" (240 mm)*
A	3	John Deere Contour Master	F	10.6" (270 mm)
A	2	John Deere (w/o dust shields)	R	8.1" (205 mm)**
C	2	Gleaner	R	7.5" (190 mm)*
A	2	Challenger 670, Massey Ferguson 9790	R	7.5" (190 mm)*
B	3	Challenger 660, Massey Ferguson 9690	R	7.5" (190 mm)*

* - Dust shields must be removed from all combines where possible, except John Deere Contour Master.

Preparing the Adapter

POSITION THE RETRACTING TINE DRUM (continued)

IMPORTANT: To prevent damage to header side drapers or adapter drum when dimension "X" (from previous page) exceeds 10" (255 mm) on 972, 973 & 974 headers, or 9-1/2" (235 mm) on 963 headers, float lockout pins must be located to prevent header from floating fully up when float is engaged.
NOTE: Adapter leg must also be in position "B" when RTD is this far forward, refer to page 39.

To find a safe position for float lockout pins for these situations:

1. The normal "float engaged" position for handle (A) is fully down as shown. In situations where float must be limited to prevent damage, the handle must be raised and pinned in a higher position.

2. To find this position, once header is attached, shorten center link to minimum length and float header up. For 974 Headers, set to maximum "smile" position by lowering onto 5" (125 mm) blocks at each end.

3. Raise handle (A) both sides, to hole (J) for 963/973/974 Headers or hole (K) for 972 Headers. This is the "header attach" position and ensures no interference.
   NOTE: For John Deere Contour Master combines with 963 Harvest Headers, rest handle (A) on bolt (B) and place pin in hole (L). Bolt (B) should be located in lower hole for all other combines.

4. Starting from this position, lower handle one hole at a time and turn drum by hand, checking for interference.

5. When interference occurs, return to previous higher position and make a mark on the float frame at top of handle for future reference. Use this position when operating the header.



LIMIT FLOAT BY RAISING "ENGAGED" POSITION OF HANDLE

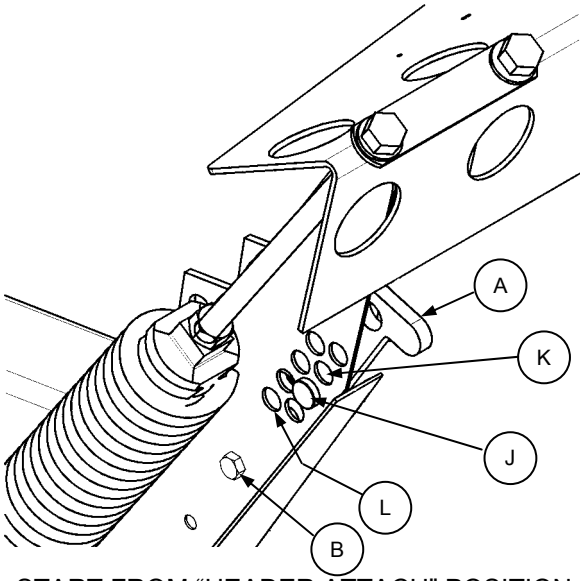

START FROM "HEADER ATTACH" POSITION AND LOWER HANDLE TO FIND "FLOAT LIMITED" OPERATING POSITION

Preparing the Header

INSTALL HEADER SIDE DRAPERS

NOTE: For 963 Headers only – For delivery openings of 41.7" (1060 mm) and smaller, before installing draper, install draper supports (S) at cutterbar side of idler roller bars using 3/8 x 3/4" carriage head bolts and flange nuts. For larger openings, remove supports (S), if installed.

1. Connect side drapers according to your Header Set-Up Instructions or Operator's Manual.
   IMPORTANT: Cut off any excess flap only after drapers have been connected and tensioned and overlap at sides of feed draper deck has been checked.

2. In some cases, actual opening size will be varied by re-positioning deck on one side to properly overlap and align with feed draper. See plasticized Set-Up card provided.

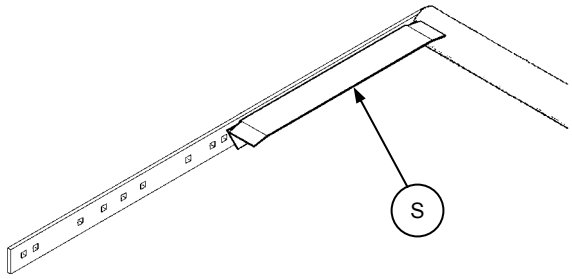

INSTALL DRAPER SUPPORTS -
963 HEADERS WITH 41.7" DELIVERY
OPENING OR SMALLER

INSTALL LINKAGE SUPPORTS – 972/973 HEADERS

Attach linkage supports (A) to header lower legs, using two 3/8 x 3/4" Torx Head screws per side.

- **For 972 Header**, the linkage support assembly and hardware are not supplied with the header. Order the following:
  Part No. 129160 – Support Assembly, (qty. 2)
  Part No. 135157 – Screw, Torx Head, 3/8 x 3/4" (qty. 4)

NOTE:
- **For 963 Headers,** linkage supports are factory installed in the lower legs.

IMPORTANT: For 963, 972 and 973 Headers, when attaching header to adapter, adapter leg (B) must engage header leg on top of support (A) as shown, both sides.

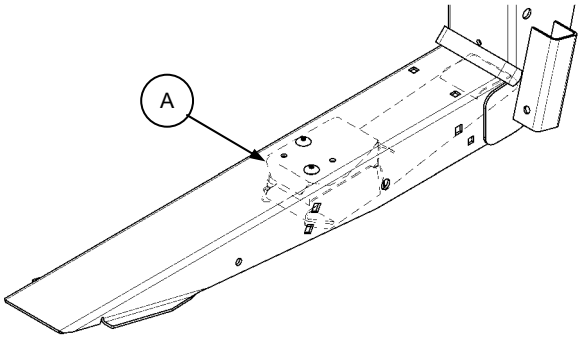

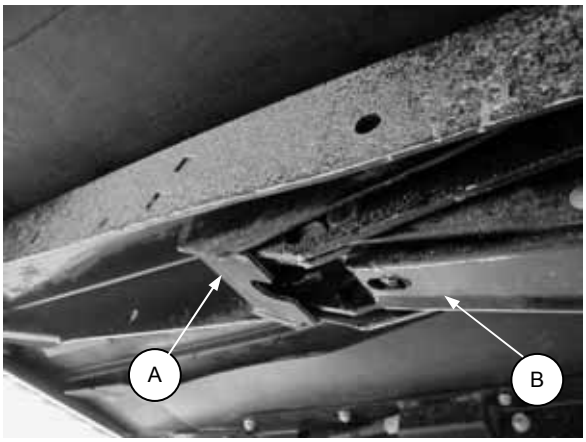

SUPPORTS IN LOWER LEGS:

NOTE: The 963 Header completion package may contain several parts that are required for prior header and adapter models, but are **not required** for 963 headers on 873 Adapters. These parts are shown at right.

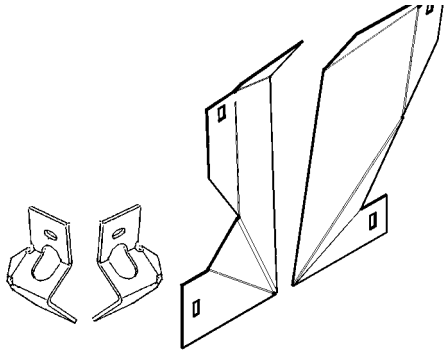

963 HEADER COMPLETION PARTS
NOT USED

Preparing the Header (cont'd.)

ELECTRICAL HARNESS

Attach electrical harness extension, (shipped with adapter) to your header wiring harness. This allows connection to combine harness for operation of amber lights on header.

NOTE: For combines that do not have a harness connector for feeder house attachments, order Wiring Harness (MacDon Part No. 40435), and splice into combine harness as follows:
Dark Blue Wire: to L/H turn signal circuit
Light Blue Wire: to R/H turn signal circuit
Black Wire: to Ground

NOTE: Some combine adapter wiring harnesses are supplied with circuits for special functions such as:

- Reel Speed Sensor
- Reel Height Sensor
- Header Height Sensor (Float Optimizer)

The routing of these harnesses is described on the Installation Instructions provided with the sensor kits.

ATTACH DRIVELINE

Attach driveline supplied with adapter to header sickle drive shaft. Ensure bolt will align with groove in shaft and install M12 hardware provided to secure clamp yoke to shaft. Connect chain to shield chain at (A). When reinstalling shield, engage hook (B) in hole in shield. It may be necessary to swing driveline into alignment with header shaft to allow this.

For storage, place other end of driveline to in hook (C) on adapter. Attach chain to adapter frame at (D).

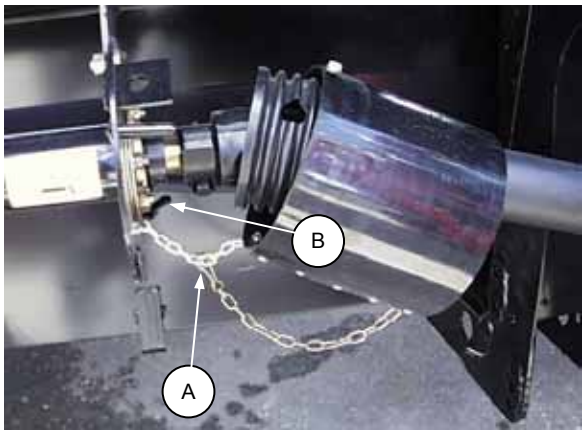

ATTACH DRIVELINE TO HEADER SHAFT

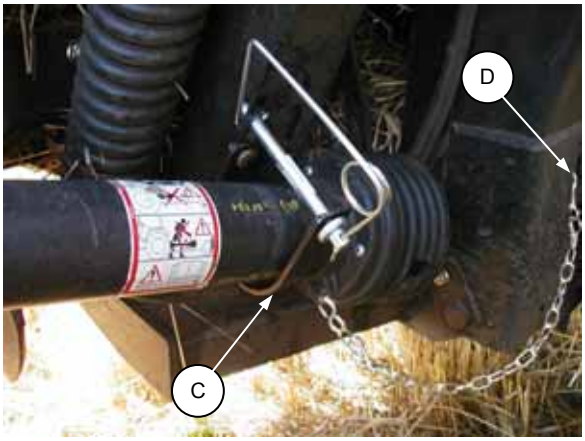

DRIVELINE STORAGE ON ADAPTER

ATTACH SICKLE DRIVE PULLEY

Bolt the sheet metal pulley (E) provided with the adapter on the sickle drive pulley (963) or drive hub (972/973/974) at the left end sheet, using three 3/8 x 1 inch bolts with lock washers.

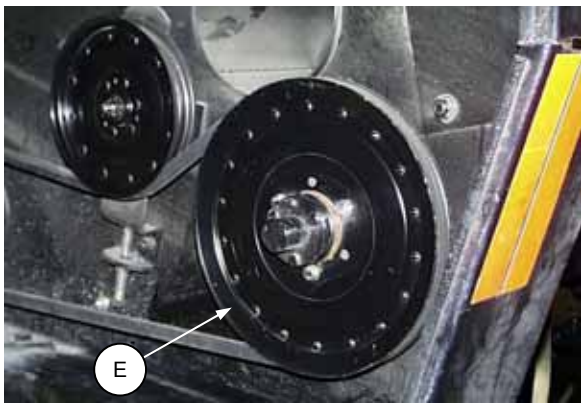

INSTALL SICKLE DRIVE PULLEY

Preparing the Header (cont'd.)

INSTALL REEL LIFT ADAPTER FITTING – 972 ONLY

Install hydraulic adapter fitting (not supplied) on reel lift hose at left of delivery opening.
Order the following:
Part No. 135195 – Adapter Fitting (qty. 1)

ATTACH HYDRAULIC CENTER LINK

NOTE: For headers with hydraulic reel fore-aft, the hydraulic center link includes a valve controlled by a cab mounted selector switch to allow the operator to change the control function between header tilt and reel fore-aft.

Attach cylinder assembly as follows:

1. Orient cylinder with hoses routed towards header.

2. Attach barrel end of cylinder to header with 1-inch diameter clevis pin and lynch pin.

NOTE: When attaching to adapter, for all John Deere combines and New Holland Combines with dust shields, mount center link in forward hole of adapter mounting lug. For all combines with 963 Header, mount in forward hole. For all other combines with 972, 973 or 974 headers, mount in rear hole.

3. Route hoses along header tube to left header leg using clamp provided at (A) and attach valve to the hydraulic/electrical tower. See Mounting Instruction for your combine for attachment details.



HYDRAULIC CENTER LINK

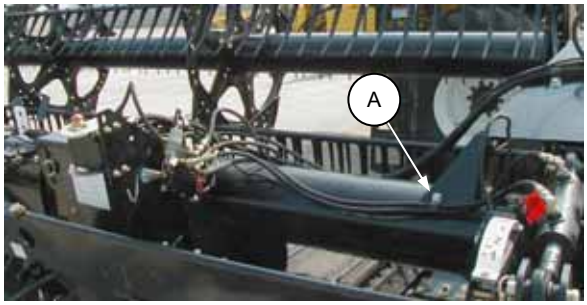

ROUTE CENTER LINK HOSES

HEADER TILT / REEL FORE AFT SELECTOR VALVE HOSE CONNECTION CHART				
Combine Models:	**Barrel end Tilt Cylinder Port (At Header) Connects to:**	**Rod End Tilt Cylinder Port (At Adapter) Connects to:**	**R/H Fore-Aft Cylinder (Green) Connects to:**	**L/H Fore-Aft Cylinder (Red) Connects to:**
Case AFX and New Holland CR/CX	Valve Port – A2	Valve Port – B2	Valve Port – A1	Valve Port – B1
All Other Combines	Valve Port – A1	Valve Port – B1	Valve Port – A2	Valve Port – B2

ASSEMBLY

ATTACH ADAPTER TO COMBINE

Attach combine adapter to feeder housing of combine. See Preparation and Mounting Instructions specific to your particular make of combine on the following pages:

Case IH 20 Series – pg. 51 New Holland CR & CX & Case AFX – pg. 54 John Deere – pg. 58
Lexion – pg. 70 Agco – pg. 79

The Preparation and Mounting Instructions for other models of combines will be provided on a separate insert.

ATTACH HEADER

CAUTION: Read the Operator's Manuals carefully to familiarize yourself with procedures and controls before attaching header to combine.

NOTE: Hydraulic hose lengths and couplings are provided based on the latest available information from combine manufacturers. Should these not be suitable for a particular model or production series, modify or purchase the necessary components.

See page 8 for "Attaching Header to Combine".

See Header Operator's Manual for assembly instructions not related to the adapter.

ADJUSTMENTS & CHECKS

1. Check that feed draper rear roller moves up and down freely.

2. Run drapers slowly for 5 minutes to fill hydraulic lines, then check oil level at adapter reservoir.

3. Check combine face plate angle as follows:
   - Set adapter float so float arm is resting on down stop.
   - Lower header to just contact the ground with the center link fully retracted.
   - Indicator (A) at left side of adapter frame should point to back edge of frame as shown. This provides optimum range of adjustment of the header angle at the center link.
   - For combines with adjustable face plate angle, if indicator does not point as above, adjust face plate angle to suit. See your Combine Operator's Manual for adjustment instructions.



CHECK FOR OPTIMUM FACE-PLATE ANGLE

Perform final adjustments and checks as listed on the "Pre-Delivery Checklist" (yellow inserts) in this manual and the Header Operator's Manual to ensure the machine is field-ready.

Adapter Mounting Instructions for Case IH 60, 77 & 80 Series Combines

PREPARING THE HEADER

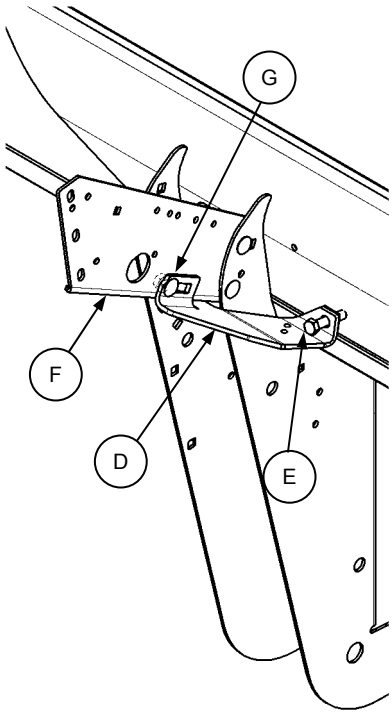

1. Attach the hydraulic/electrical completion package as follows:

- Mount the coupler bracket provided with the adapter to the inboard flange of the left header leg with two 1/2 x 1 inch carriage bolts and flange nuts at (A). (For 963 Header, coupler bracket bolts to a bracket welded to the header back tube near left side of opening.)
- Attach brace (D) to coupler bracket (F) using 1/2 x 1 inch carriage bolt and flange nut at (G). Ensure brace (D) is tight against backtube and bottom of coupler bracket. Tighten bolt (E) and jam nut after tightening brace to coupler bracket. Bolt (E) should be tight enough to ensure L/H leg of brace is tight against backtube.
- Match the coloured cable ties to connect the header hoses to the coupler plate assembly:
  Reel Drive – Yellow to Yellow and White to White.
  Reel Lift – Black to Black
- Mount the Reel Fore-Aft/Header Tilt selector valve (if equipped) to the coupler bracket with two 1/4 x 2-1/2 inch hex bolts and nuts at (B).
- Match the coloured cable ties to connect hoses for Reel Fore-Aft/Header Tilt – Red to Red and Green to Green.

WARNING: For headers with hydraulic reel fore-aft, never connect the two fore-aft couplers to each other. This would complete the circuit and allow the reel to creep forward in transport, resulting in instability. The reel lift line (black cable tie) can be connected to the reel fore aft coupler (red cable tie) for storage. Cap the other reel fore-aft hose coupler.

- After attaching to combine, reposition hoses in clamps for best fit-up to combine connection points.

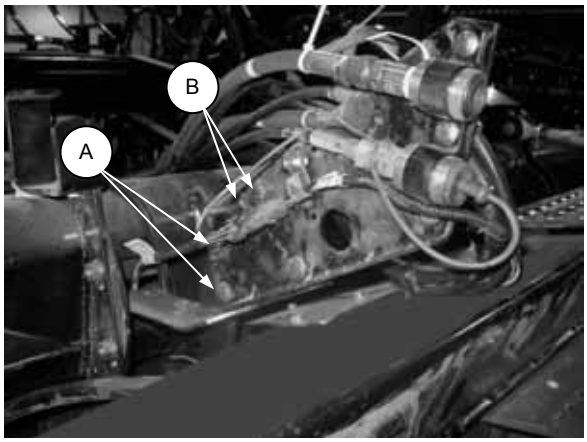



OUTBOARD VIEW INBOARD VIEW
ATTACH REEL DRIVE MOUNTING PLATE TO HEADER L/H LEG
(SHOWN WITH UPPER CROSS AUGER SHIELDING PACKAGE INSTALLED)

Adapter Mounting Instructions for Case IH 60, 77 & 80 Series Combines

PREPARING THE COMBINE

1. Check with Combine dealer to ensure combine is equipped with tire size, rear ballast etc. to carry larger headers.

2. For 30', 36' & 39' headers, install optional third feeder house lift cylinder. Order numbers:
   Feed House Lift Cylinder Kit: Kind - 172, Code - 1092
   Accumulator Kit: Kind - 172, Code – 1084

3. Dust shields may remain installed with factory setting of adapter feed drum. Feeding may be improved by removing dust shields and moving drum towards feeder house. See page 45.

4. Remove shield from R/H feeder house output shaft and replace with shield (A) and drive arm support (B) provided with adapter. This shield can be hinged out of the way for MacDon adapter and swung back into place for pick-up header.
   NOTE: For narrower feeder house combines (1640, 1644, 1660, 1666, 2166 and 2366) install shield extension (C) between feeder house and drive arm support.

5. Set feeder house face plate, feeder chain and drum height as shown on Quick Reference Card.

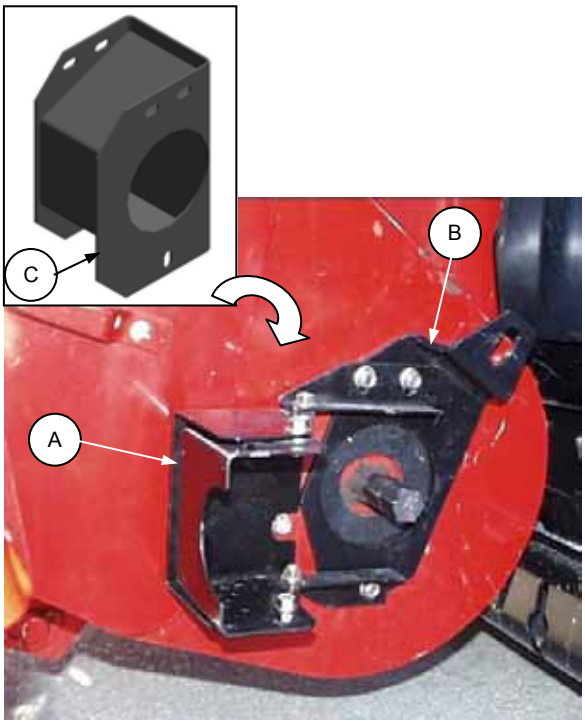

HINGED R/H SHIELD
(WITH EXTENSION FOR NARROW FEEDERS)

ATTACHING ADAPTER TO COMBINE

1. Slowly drive combine up to adapter until feeder saddle (D) is directly under adapter top cross member.

2. Raise feeder house to lift adapter, ensuring feeder saddle is properly engaged in adapter frame. Raise adapter fully.

WARNING: To avoid bodily injury or death from unexpected start-up or fall of raised attachment; stop engine, remove key and engage lift cylinder stop before proceeding with hook-up.



ALIGN FEEDER SADDLE UNDER
ADAPTER FRAME

Adapter Mounting Instructions for Case IH 60, 77 & 80 Series Combines

ATTACHING ADAPTER TO COMBINE (continued)

3. Lower latch handle (E) (one each side of feeder house) to hook pivot bar (F). Lift handle to over-center position to lock. It should take 40 to 50 lbs. force (180 to 220 N) to move handle over-center. Adjusting the torque of bolts (G) will vary the handle force required. When handle force is correct, tighten jam nuts (K).

4. Install pin (H) as shown to secure the latch handle in locked position.

NOTE: If latches do not line up with pivot bar, adjust adapter side frame panels by loosening hardware at (L) (four bolts per side) and sliding panels to suit.

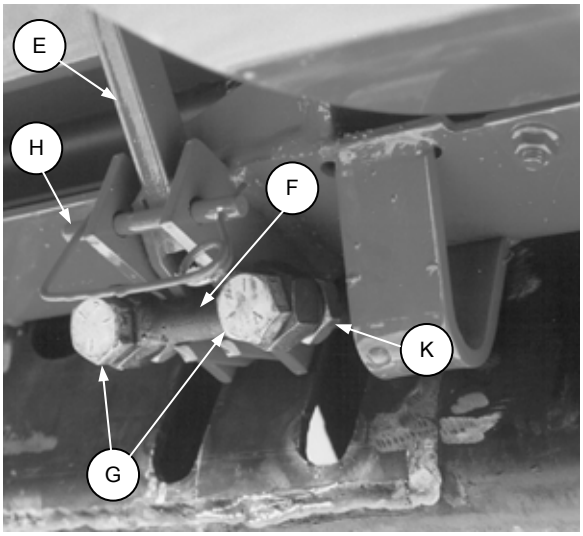

ENGAGE LOCKS - BOTH SIDES

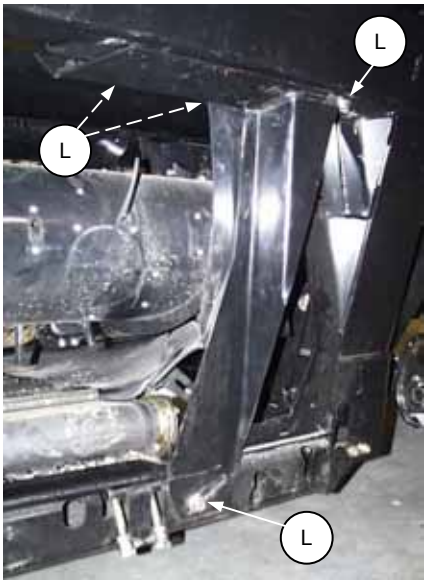

ADJUST SIDE PANELS TO ALIGN LATCHES

5. Install pump as follows:

CAUTION: Pump may be hot. Wear gloves when handling pump.

a. Remove pump from storage position (A) on adapter and slide pump onto R/H feeder house output shaft.

   NOTE: The first time the pump is installed, remove cap from bore of spline coupler. Hoses may have to be loosened for proper alignment. Tighten hoses after installation.

b. Engage pump torque arm on support arm on adapter and secure with lynch pin at (B).



PUMP STORED ON ADAPTER FRAME

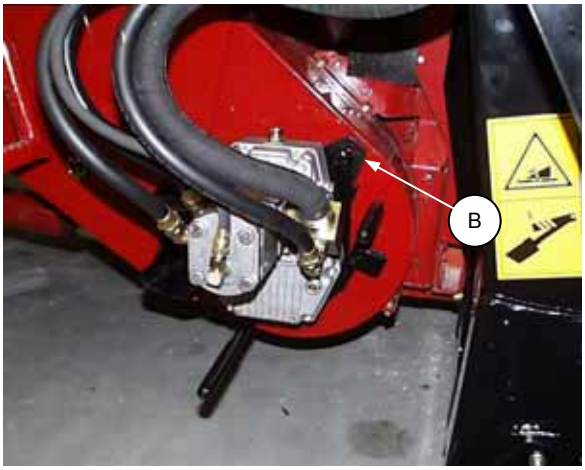

PUMP IN WORKING POSITION

Adapter Mounting Instructions
for Case AFX / New Holland CR & CX Combines

PREPARING THE 973/974 HEADER

1. Attach the hydraulic/electrical completion package as follows:

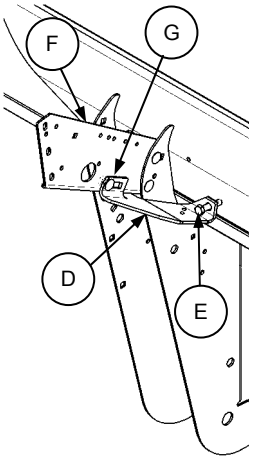

- Mount the coupler bracket provided with the adapter to the inboard flange of the left header leg with two 1/2 x 1 inch carriage bolts and flange nuts at (A). (For 963 Header, coupler bracket bolts to a bracket welded to the header back tube near left side of opening.)
- Attach brace (D) to coupler bracket (F) using 1/2 x 1 inch carriage bolt and flange nut at (G). Ensure brace (D) is tight against backtube and bottom of coupler bracket. Tighten bolt (E) and jam nut after tightening brace to coupler bracket. Bolt (E) should be tight enough to ensure L/H leg of brace is tight against backtube.
- **NOTE:** If upper cross auger shielding is installed, install adapter bracket (C) and move multi-link coupler onto this bracket as shown. This allows clearance to lock the multi-link handle over-center.
- Match the coloured cable ties to connect the header hoses to the multi-link coupler:
  Reel Drive – Yellow to Yellow and White to White.
  Reel Lift – Black to Black
- Mount the Reel Fore-Aft/Header Tilt selector valve (if equipped) to the coupler bracket with two 1/4 x 2-1/2 inch hex bolts and nuts at (B).
- Match the coloured cable ties to connect hoses for Reel Fore-Aft/Header Tilt – Red to Red and Green to Green, on the multi link connector.
- A header recognition resistor (H) is supplied with the adapter. This plugs into the main harness with short adapter provided, or into float optimizer sensor harness (if equipped), to send a recognition signal to the combine computer.

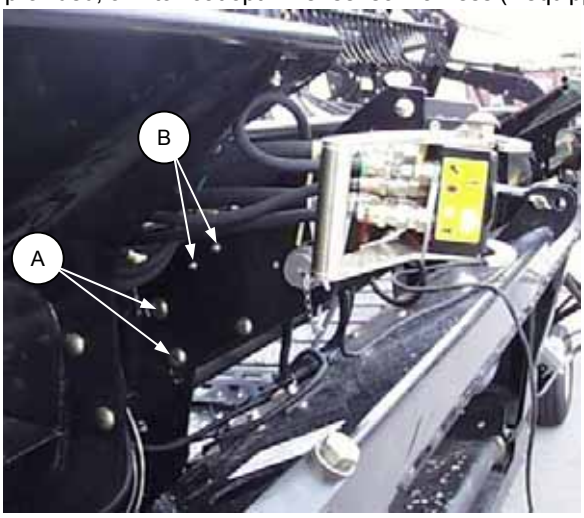

OUTBOARD VIEW

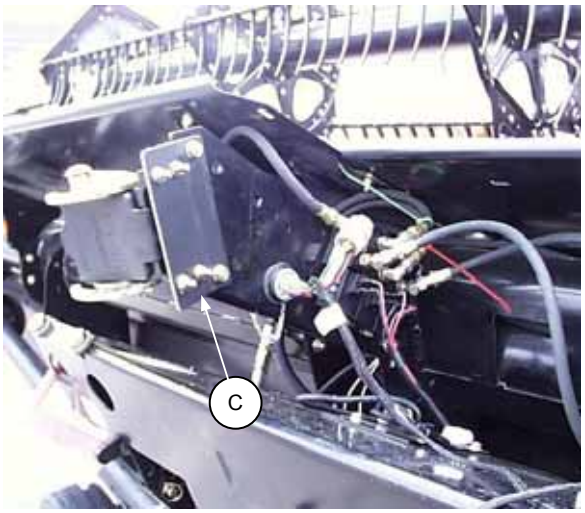

INBOARD VIEW

ATTACH REEL DRIVE MOUNTING PLATE TO HEADER L/H LEG
(SHOWN WITH UPPER CROSS AUGER SHIELDING PACKAGE INSTALLED)



FLOAT OPTIMIZER –
HEADER RECOGNITION RESISTOR



MULTI-LINK CONNECTED TO HEADER

Adapter Mounting Instructions
for Case AFX / New Holland CR & CX Combines

PREPARING THE CX COMBINE

1. For all CX model combines, check with Combine dealer to ensure combine is equipped with tire size, rear ballast etc. to carry larger headers.
   NOTE: CR 920/940 require 70 mm cylinders (NH kit 84060212) to lift 36' & 39' 973 & 36' 974 headers.

2. Feeding may be improved by removing dust shields and moving drum towards feeder house. See page 45 for all necessary adjustments.

3. Install feeder plate extension (G). Move feeder bottom shaft to the front hole (Cereal Position) (H).

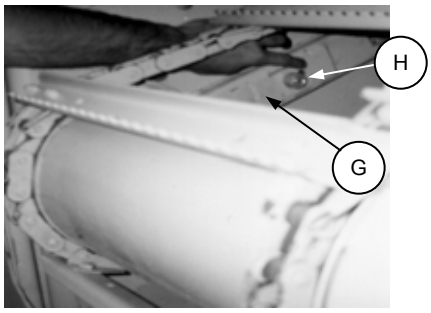

4. Adjust the bottom shaft float to 3-1/2 inch (90mm). Adjust the feeder chain tension according to the gauge on the spring. (Fig. B)

5. For models with variable speed feeder house drive, set header output shaft speed to 575 rpm.

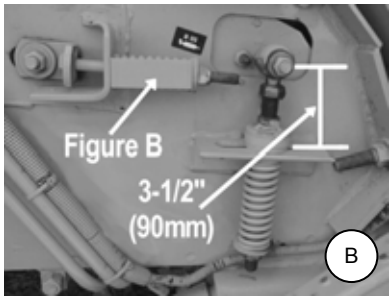

6. Attach gearbox support (A) and clamp (D) to feeder house with two 3/8 x 1-1/4 inch carriage bolts and flange nuts as shown.

7. If equipped adjust feeder house faceplate rearward approximately 3/4 of the way back using adjusting nuts (J).



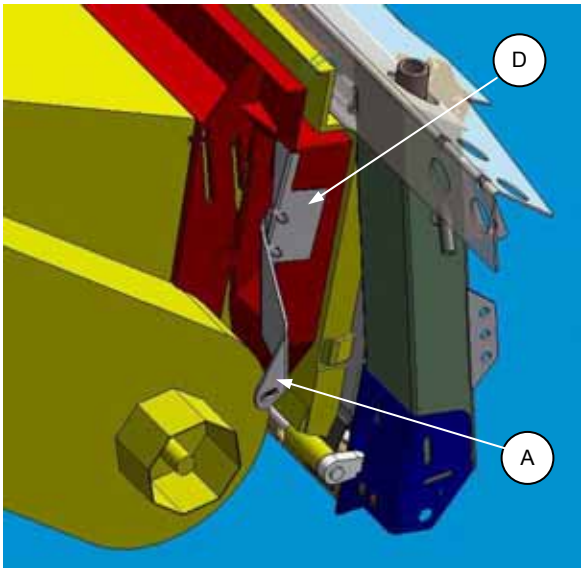

ATTACH GEARBOX SUPPORT – CX

Adapter Mounting Instructions for Case AFX / New Holland CR & CX Combines

PREPARING THE NEW HOLLAND CR AND CASE AF COMBINE

1. For CR 920/940/960 model combines, check with Combine dealer to ensure combine is equipped with tire size, rear ballast etc. to carry larger headers.
   NOTE: CR 920/940 require 70 mm cylinders (NH kit 84060212) to lift 36' & 39' 973 & 36' 974 headers.
2. Feeding may be improved by removing dust shields and moving drum towards feeder house. See page 45 for all necessary adjustments.
3. For models with variable speed feeder house drive, set header output shaft speed to 575 rpm.
4. Adjust front drum height to Small Grains position. See Combine Operator's Manual.
5. Adjust feeder house faceplate rearward (towards the cab) to mid-position. See Combine Operator's Manual.
6. Adjust stone ejection roll to raised position. See Combine Operator's Manual.
7. **New Holland CR** – Attach gearbox support (A) to feeder house with 70 x 140 mm rectangular shim, 3/4 x 2 inch hex head bolt and lock nut. Place shim between support and feeder housing for proper fit-up.

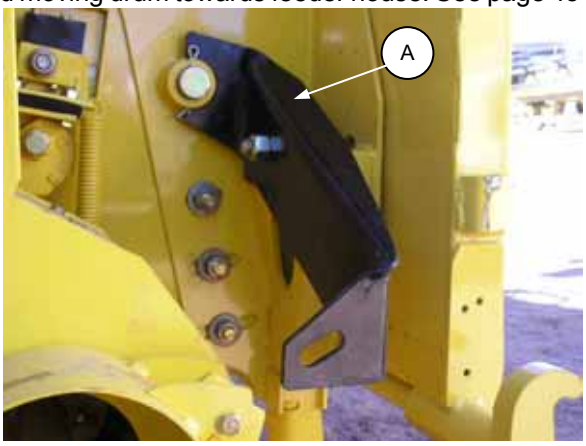

ATTACH GEARBOX SUPPORT
NEW HOLLAND CR

ATTACHING ADAPTER TO CR/CX/AFX COMBINE

1. Slowly drive combine up to adapter until feeder saddle (B) is directly under adapter top cross member (C).
2. Raise feeder house to lift adapter, ensuring feeder saddle is properly engaged in adapter frame. Raise adapter fully.

WARNING: To avoid bodily injury or death from unexpected start-up or fall of raised attachment; stop engine, remove key and engage lift cylinder stop before proceeding with hook-up.



ALIGN FEEDER SADDLE UNDER
ADAPTER FRAME – CX SHOWN

Adapter Mounting Instructions
for Case AFX / New Holland CR & CX Combines

ATTACHING ADAPTER TO COMBINE (continued)

3. Lift latch handle at left side of feeder house and engage lock at (E). If handle cannot be raised enough to engage lock, remove shim package (both sides) by removing nuts (F), and rearrange assembly as shown at (G) so that one fewer shim is protruding into latch opening.

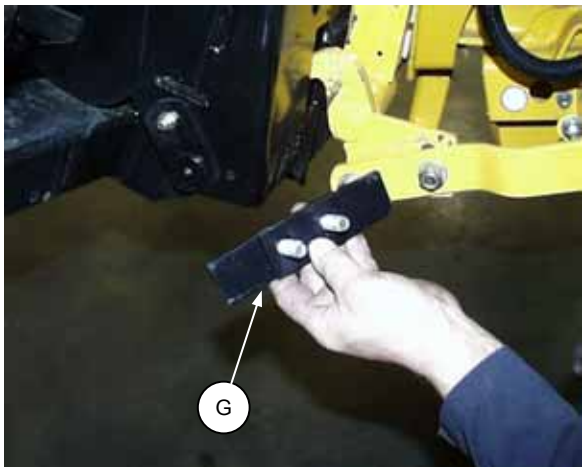

ADJUST LATCH SHIMS IF REQUIRED

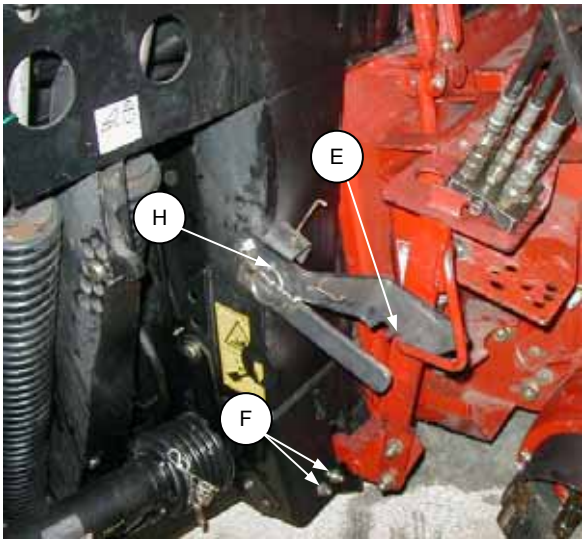

ENGAGE LOCK FOR BOTTOM LATCHES

NOTE: At first use, pull clevis pin (H) back and raise latch handle to working position shown.

4. Install pump as follows:

CAUTION: Pump may be hot. Wear gloves when handling pump.

a. Remove pump from storage position (A) on adapter and slide pump onto R/H feeder house output shaft.
NOTE: The first time the pump is installed, remove cap from bore of spline coupler. Hoses may have to be loosened for proper alignment. Tighten hoses after installation.

b. Engage pump torque arm on support arm on adapter and secure with lynch pin at (B).

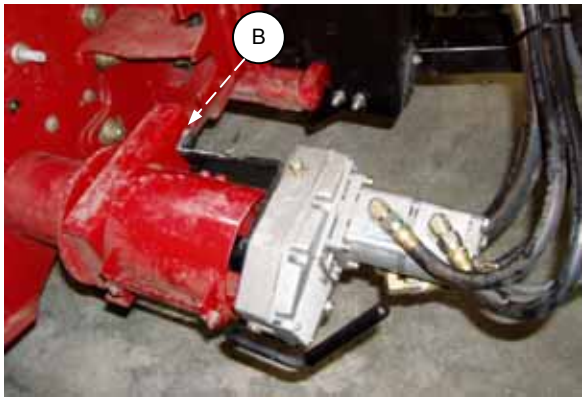

PUMP IN WORKING POSITION – CASE AFX



PUMP STORED ON ADAPTER FRAME

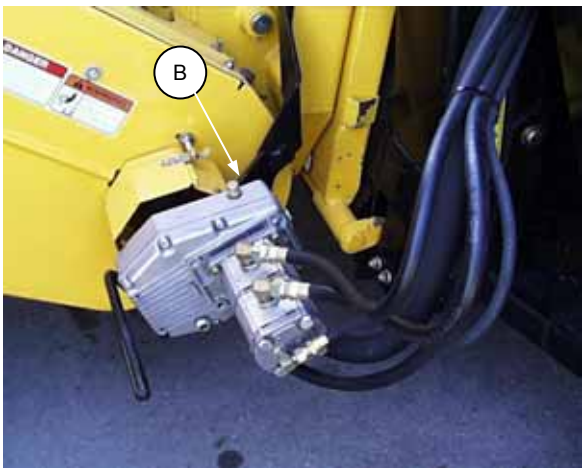

PUMP IN WORKING POSITION – CX SHOWN

Adapter Mounting Instructions for John Deere Combines

PREPARING THE HEADER

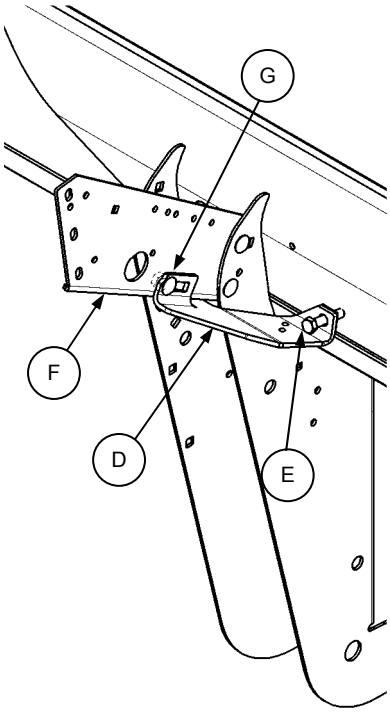

1. John Deere (all models except 60 Series Combines):

- Attach the hydraulic/electrical completion package as follows:
- Two coupler brackets are provided with the adapter for John Deere combines, as hydraulic connections are made at both sides of feeder house.
- Mount the coupler bracket with ***one*** pre-mounted coupler to the inboard flange of the ***left*** header leg with two 1/2 x 1 inch carriage bolts and flange nuts at (A). (For 963 Header, coupler bracket bolts to a bracket welded to the header back tube near left side of opening.)
- Attach brace (D) to coupler bracket (F) using 1/2 x 1 inch carriage bolt and flange nut at (G). Ensure brace (D) is tight against backtube and bottom of coupler bracket. Tighten bolt (E) and jam nut after tightening brace to coupler bracket. Bolt (E) should be tight enough to ensure L/H leg of brace is tight against backtube.
- For headers with optional hydraulic reel fore-aft/header tilt options, install red & green couplers and spacers (D) to coupler brackets as shown: Green to left and Red to right.
- Match the coloured cable ties to connect the header hoses to the left hand coupler bracket:
  Reel Fore-Aft/Header Tilt – Green to Green – top coupler.
  Reel Lift – Black to Black – lower coupler.
- Mount the Reel Fore-Aft/Header Tilt selector valve (B) (if equipped) to the left hand coupler bracket with two 1/4 x 2-1/2 inch hex bolts and nuts.
- Mount the other coupler bracket with ***two*** pre-mounted couplers to the inboard flange of the ***right*** header leg with three 1/2 x 1 inch carriage bolts and flange nuts at (C). (For 963 Header, coupler bracket bolts to a bracket welded to the header back tube near right side of opening.)
- Match the coloured cable ties to connect the header hoses to the right hand coupler bracket:
  Reel Drive – Yellow to Yellow and White to White – two lower couplers.
  NOTE: For 2-arm headers (21' & 25') pull the reel drive hoses out of the centre channel and route to the R/H coupler bracket. Shorten hoses to fit and attach to re-usable hose ends supplied.
  For 3-arm headers (30' & 36') detach the yellow and white tagged hoses shipped on the coupler bracket. Re-route the existing reel drive hoses on the header to the R/H bracket and connect.
  Reel Fore-Aft/Header Tilt – Red to Red – top coupler. Route this hose across header opening from left leg to right. Tie to hydraulic lines or hoses for best appearance.

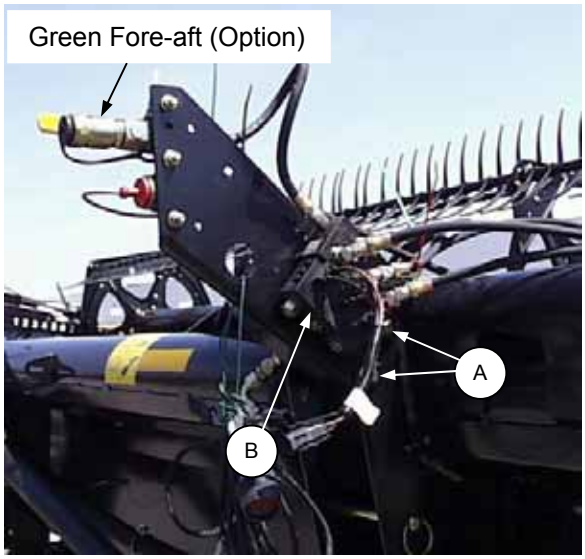

LEFT HAND COUPLER BRACKET
(SHOWN WITH REEL FORE-AFT KIT)

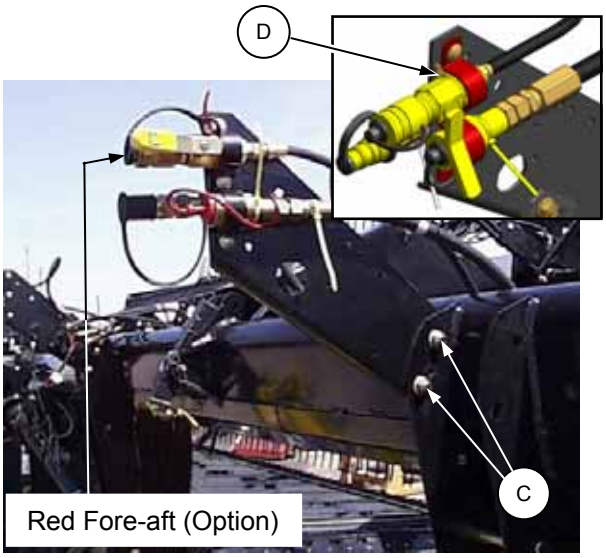

RIGHT HAND COUPLER BRACKET
(SHOWN WITH REEL FORE-AFT KIT)

Adapter Mounting Instructions for John Deere Combines

Clamping Fore-Aft Hoses

- Move clamp from position (A) to position (B) as shown.

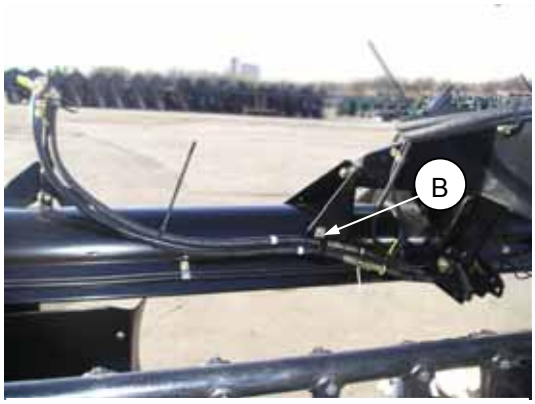

CLAMPING FORE-AFT HOSES - AFTER SETUP

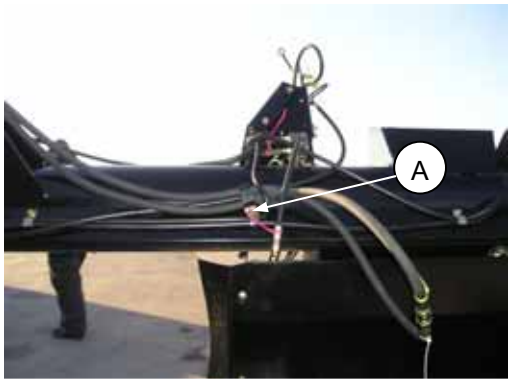

CLAMPING FORE-AFT HOSES – AS SHIPPED

2. John Deere 60 Series Combines:
   NOTE: Order the following from your John Deere dealer (not supplied by MacDon): Multi coupler JD# AH166991 (with five couplers), qty. 1, **OR** JD# AH166993, qty. 1 (without reel fore-aft couplers).

- Mount the coupler bracket (F) to the inboard flange of the left header leg with two 1/2 x 1 inch carriage bolts and flange nuts.

- Attach brace (D) to coupler bracket (F) using 1/2 x 1 inch carriage bolt and flange nut at (G). Ensure brace (D) is tight against backtube and bottom of coupler bracket. Tighten bolt (E) and jam nut after tightening brace to coupler bracket. Bolt (E) should be tight enough to ensure L/H leg of brace is tight against backtube.

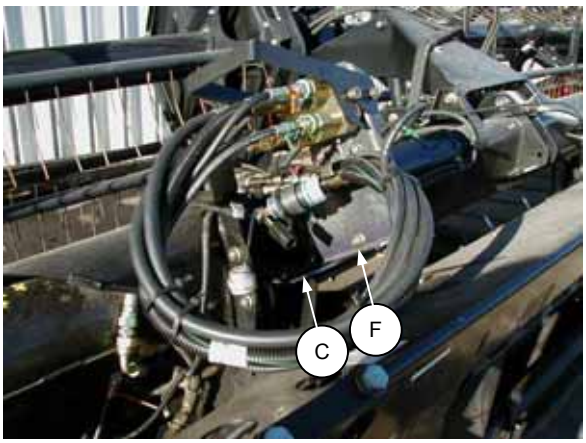

JOHN DEERE 60 SERIES COMBINE

- Match the coloured cable ties at the header end of hoses to connect the header hoses to the coupler bracket hoses.
  NOTE: If the header has a hydraulic center link, use the fitting supplied in the hose to connect to the selector valve hose (green cable ties), otherwise remove it.

- Mount the wiring harness to the John Deere multi coupler with the retaining ring supplied. Mount the multi coupler to the combine.

- Match the cable ties at the combine end of hoses to coloured discs on the multi coupler ports and attach the three smaller hoses (one hose if no fore-aft installed): Red cable tie to dark blue disc, orange cable tie to light blue disc & green cable tie to green disc.

- Attach the two reel drive hoses to the other two ports on the multi-coupler.

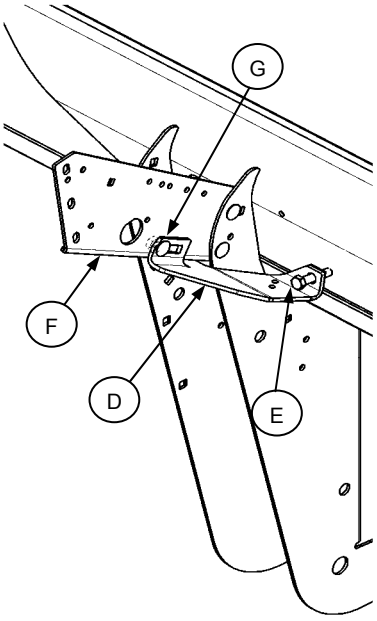

Adapter Mounting Instructions for John Deere Combines

ADAPTER COMPLETION – ALL JOHN DEERE COMBINES:

1. Install combine completion parts as shown, using hardware called out in chart.

1		FRAME – 873 Combine Adapter
2		SUPPORT – JD 60 Series Combines
3		ADAPTER – R/H frame
4		ADAPTER – L/H frame
A		BOLT – hex head, 3/4 NC x 2 inch
B		WASHER – flat, 19.8 mm ID
C		WASHER – lock, 3/4 inch ID
D		BOLT – round head, square neck, 5/8 NC x 1-1/4 inch
E		BOLT – round head, square neck, 1/2 NC x 1 inch
F		NUT – lock, smooth flange, 1/2 NC distorted thread
G		NUT – lock, smooth flange, 5/8 NC distorted thread
H		WASHER – flat, 0.812 inch ID
J		BOLT – hex head, 1/2 NC x 2-1/4 inch

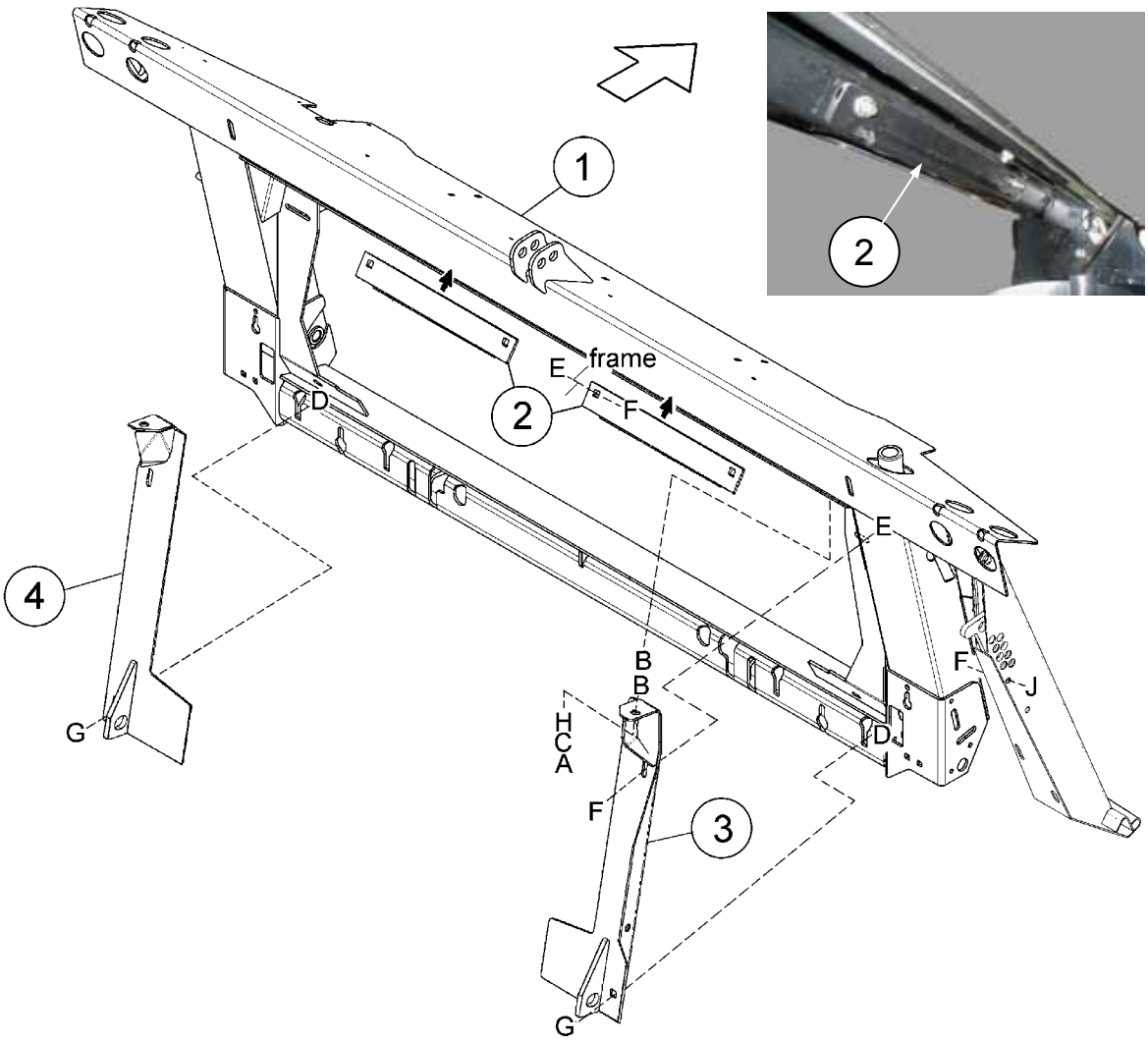

Adapter Mounting Instructions for John Deere Combines

PREPARING THE ADAPTER – JOHN DEERE PRE 50 SERIES LEVEL LAND COMBINES:

1. 9600, 9610 & Straw Walker Combines:
   Install support carrier angle (B) to R/H frame member of adapter with two 1/2 x 1-1/4 inch carriage bolts and nuts. Attach offset pump torque arm link (A) to support angle (B) with 5/8 x 1-3/4 inch hex head bolt and flange nut.

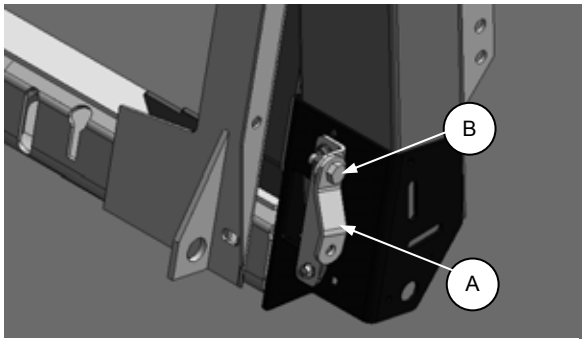

OFFSET SUPPORT WITH CARRIER ANGLE

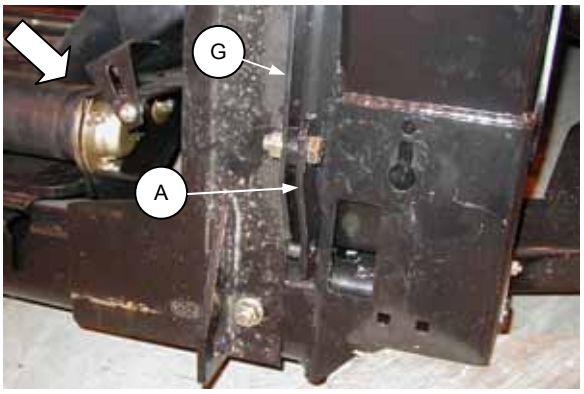

OFFSET SUPPORT

2. Level Land Prior to 50 series Feeder House:
   Attach shield (D) to left side of adapter frame.
   NOTE: For 9600, 9610 and 8820 combines, shield (E) is not required. Remove prior to installation of shield (D). Swing shield (D) forward for end transport situations.

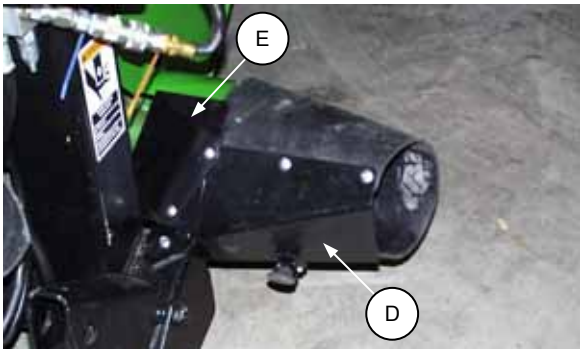

ATTACH L/H SHIELD: PRIOR TO 50 SERIES LEVEL LAND

3. All combines except Contour Master with dust shields removed:
   Move bolt (F) and nut (G) to hole (H) for proper float.

4. All combines
   Mount pump to gearbox using four Allan head screws (P) supplied. Secure pump in storage position on R/H side of adapter frame using lynch pin.
   NOTE: Place washer (M) (supplied) between pump and gearbox.
   NOTE: Allen screws (P) are taped to hydraulic lines of pump. Torque Allen screws (P) to 14 ft.lbs (20 N.m).
   NOTE: Fittings and hoses may need to be re-orientated to secure for proper storage.

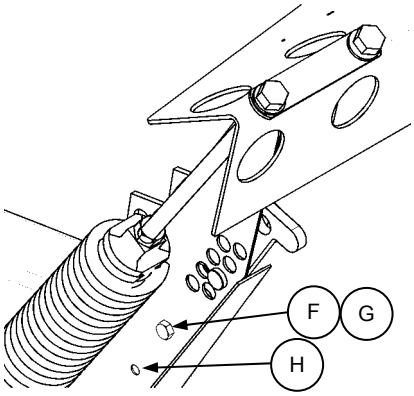

FLOAT LOCKOUT REPOSITION HARDWARE

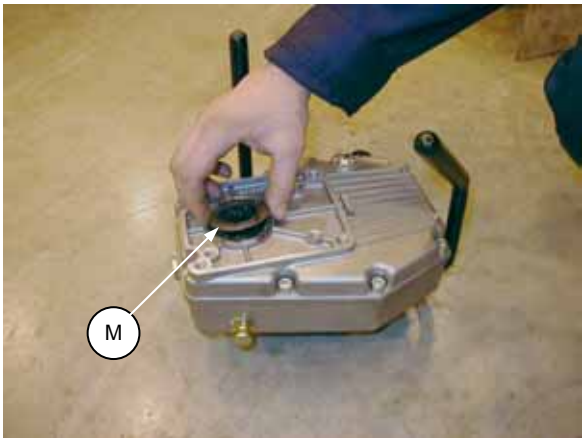



Adapter Mounting Instructions for John Deere Combines

PREPARING THE ADAPTER – JOHN DEERE 50 SERIES COMBINES:

1. 50 series (except 9650), STS, CTS & CTSII Level Land : Install pump torque arm support (A) (with offset) to R/H bolt-on support panel (G) of adapter with 5/8 x 1-3/4 inch hex head bolt and flange nut.
   NOTE: If lynch pin cannot be installed in working position, move washer between torque arm link (A) and support (B). See attaching Adapter to Combine.

2. 9650 Straw Walker Combines:
   Install support carrier angle (B) to R/H frame member of adapter with two 1/2 x 1-1/4 inch carriage bolts and nuts. Attach offset pump torque arm link (A) to support angle (B) with 5/8 x 1-3/4 inch hex head bolt and flange nut.

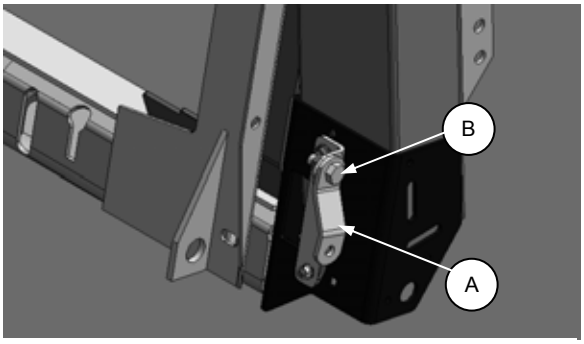

OFFSET SUPPORT WITH CARRIER ANGLE

3. 9650 Combines & Straw Walker:
   To improve feeding, add one tine to each end of retracting tine drum.

4. All Combines (except Contour Master with dust shields removed):
   Move bolt (D) and nut (E) to hole (F) for proper float.
5. ALL 50 Series Combines:
   Mount pump to gearbox using four Allan head screws (H) supplied. Secure pump in storage position on R/H side of adapter frame using lynch pin (J) as shown.
   NOTE: Torque Allan screws (H) to 14 ft.lbs (20 N.m).
   NOTE: Be sure to place flat washer (K) supplied in kit between pump and gearbox prior to installing Allan screws (H).



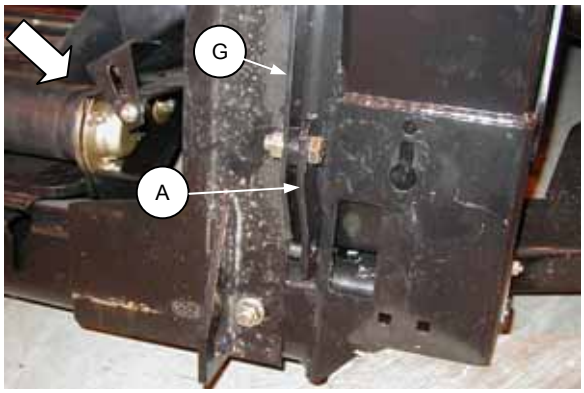

OFFSET SUPPORT – DIRECT

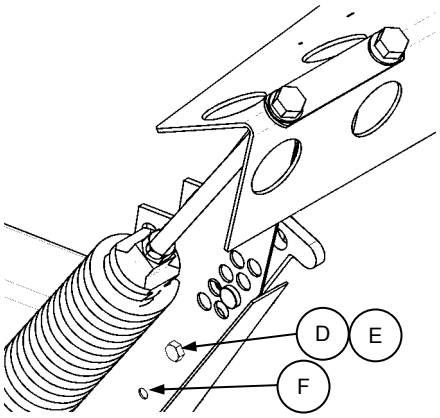

FLOAT LOCKOUT – REPOSITION HARDWARE

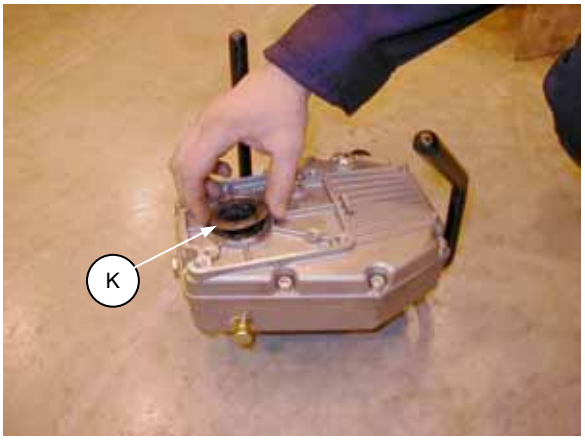

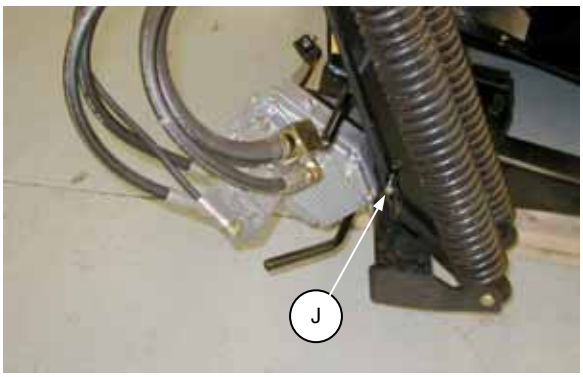

Adapter Mounting Instructions for John Deere Combines

PREPARING THE ADAPTER – JOHN DEERE 60 SERIES COMBINES:

1. 60 Series Combines & 9660 Straw Walker Combines:
   To improve feeding, add one tine to each end of retracting tine drum.

2. 60 Series Combines (except Contour Master with dust shields removed):
   Move bolt (D) and nut (E) to hole (F) for proper float.

3. 60 Series Combines:
   Mount pump to gearbox using four Allan head screws (H) supplied. Secure pump in storage position on R/H side of adapter frame using lynch pin (J).
   NOTE: Torque Allan screws (H) to 14 ft.lbs (20 N.m).
   NOTE: Be sure to place flat washer (K) supplied in kit between pump and gearbox prior to installing Allan screws (H).

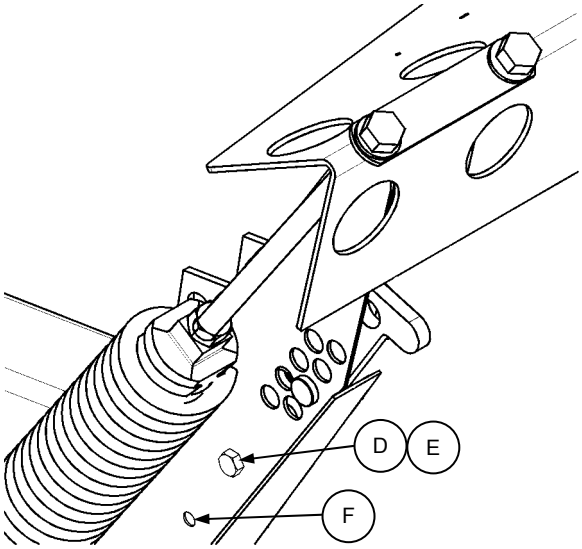

FLOAT LOCKOUT – REPOSITION HARDWARE

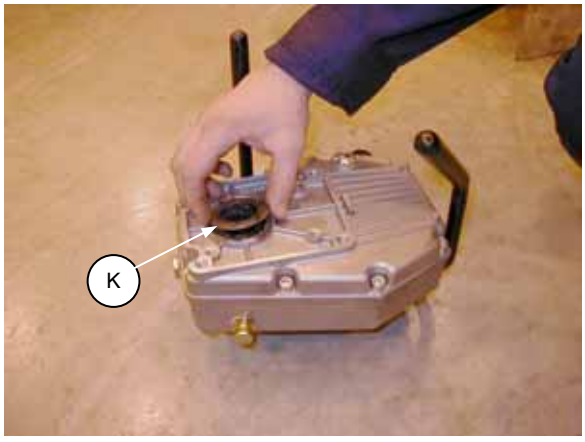

INSTALL WASHER BETWEEN PUMP & GEARBOX



MOUNT PUMP TO GEARBOX

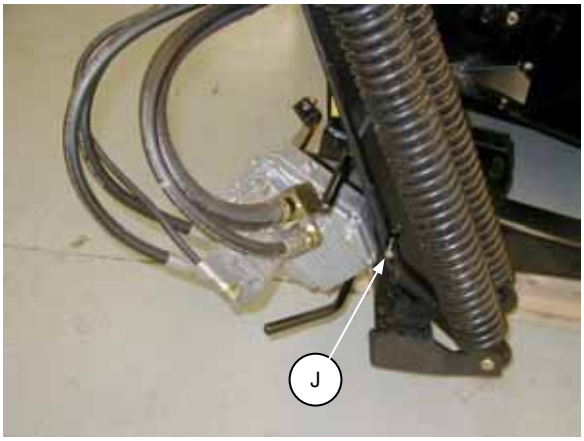

MOUNT PUMP IN STORAGE POSITION

Adapter Mounting Instructions for John Deere Combines

PREPARING THE ADAPTER – JOHN DEERE CONTOUR MASTER COMBINES (ALL):

1. 9600,9610*, 9650 & 9660 Contour Master Combines:
   Install support carrier angle (B) to R/H frame member of adapter with two 1/2 x 1-1/4 inch carriage bolts and nuts. Attach offset pump torque arm link (A) to support angle (B) with 5/8 x 1-3/4 inch hex head bolt and flange nut.
   NOTE: If lynch pin cannot be installed in working position, move washer between torque arm link (A) and support (B). See attaching Adapter to Combine.

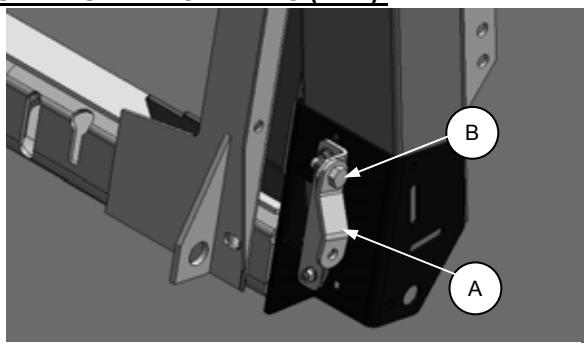

OFFSET SUPPORT WITH CARRIER ANGLE

2. Contour Master Combines (all except 9600, 9610, 9650 & 9660 Straw Walker Combines):
   Install pump torque arm support (A) (with offset) to R/H bolt-on support panel (G) of adapter with 5/8 x 1-3/4 inch hex head bolt and flange nut.

3. Contour Master only (all):
   Move retracting tine drum forward from the factory installed position to as shown on page 45.
   IMPORTANT: To avoid damage to the tine drum and/or combine, leave drum mounting hardware loose until the combine/adapter/header package is fully together. Adjust center link (connecting header to adapter) to minimum length, float header up, then tighten drum mounting hardware.

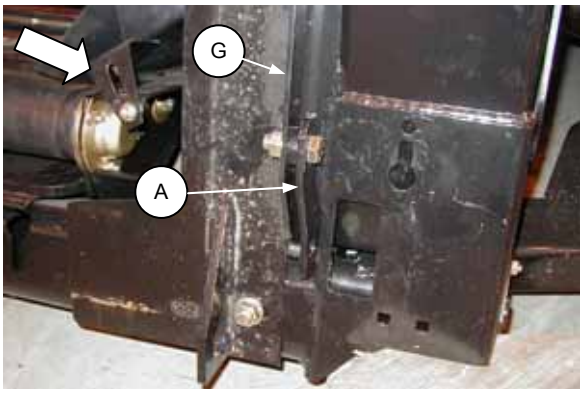

OFFSET SUPPORT – DIRECT

4. Contour Master only (all):
   Trim shaded area (F) off of plastic closure panels as shown.

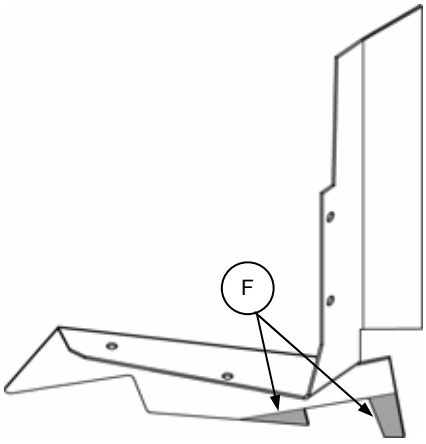

TRIM PANELS – CONTOUR MASTER
(L/H SHOWN)

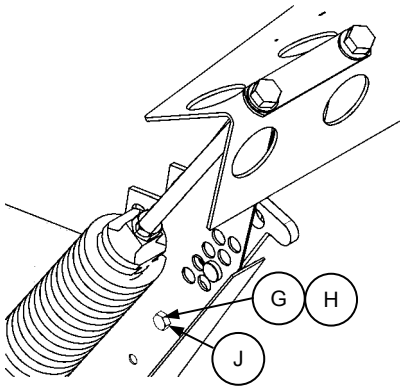

FLOAT LOCKOUT – AS SHIPPED

5. Contour Master only (all):
   Make sure bolt (G) and nut (H) are located in hole (J), (as shipped) for proper float.

Adapter Mounting Instructions for John Deere Combines

PREPARING THE ADAPTER – JOHN DEERE CONTOUR MASTER COMBINES (ALL) cont'd:

6. Contour Master (all):
   Mount pump to gearbox using four Allan head screws (H) supplied. Secure pump in storage position on R/H side of adapter frame using lynch pin (J).
   NOTE: Torque Allan screws (H) to 14 ft.lbs (20 N.m).
   NOTE: Be sure to place flat washer (K) supplied in kit between pump and gearbox prior to installing Allan screws (H).

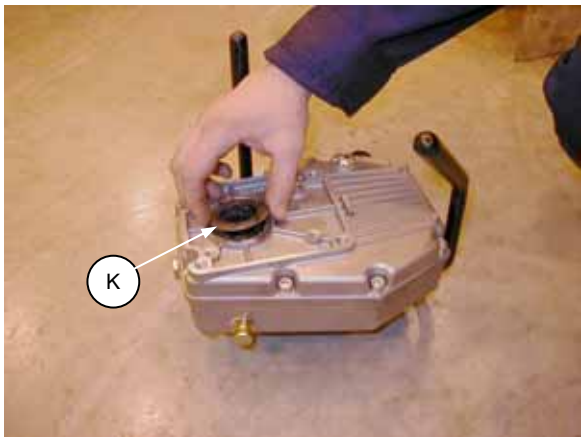

INSTALL WASHER BETWEEN PUMP & GEARBOX



MOUNT PUMP TO GEARBOX

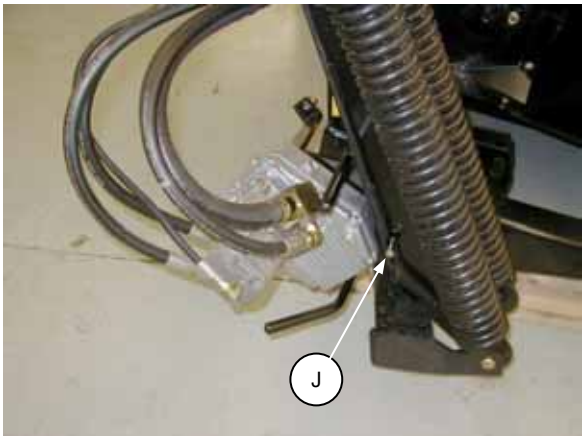

MOUNT PUMP IN STORAGE POSITION

Adapter Mounting Instructions for John Deere Combines

PREPARING THE COMBINE

1. 60 series Combines:
   Loosen and remove bolt at (H). Remove washer and discard. Ensure spacer (not shown) behind washer remains in place. Loosely re-install bolt at (H) through new torque arm bracket.
   Remove nut (J) and install bottom of torque arm bracket over bolt at bottom of feeder house. Tighten and torque bolt (H) and nut (J) to 160 ft-lbs.

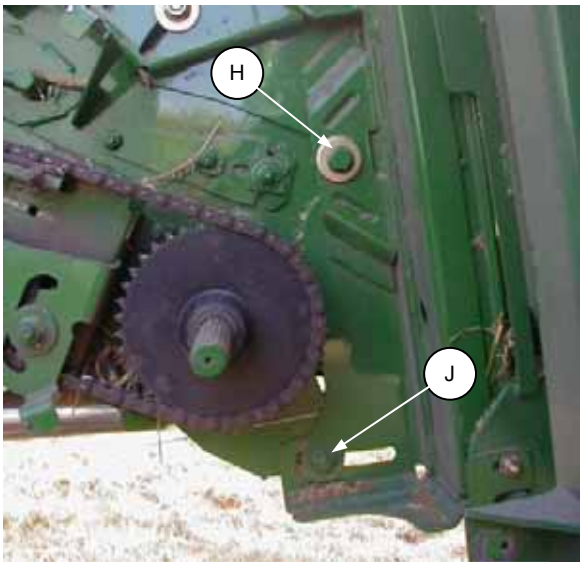

JOHN DEERE – 60 SERIES COMBINE

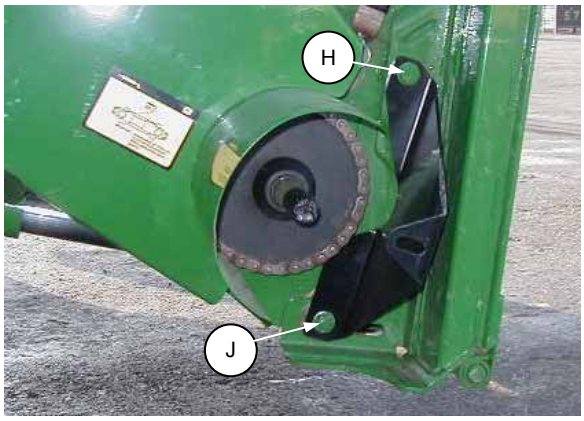

Adapter Mounting Instructions for John Deere Combines

PREPARING THE COMBINE (continued)

2. Check with Combine dealer to ensure combine is equipped with tire size, rear ballast etc. to carry larger headers.

3. **IMPORTANT:** To prevent damage to feeder house and/or adapter feed drum or to improve feeding, remove all feeder house dust shields (A), and upper and side closure panels that are removable.
   NOTE: Contour master dust shield is not fully removable. The adapter feed drum must be moved forward to compensate for this. See page 45.

4. Lock pin (B) both sides must be in retracted position before attaching adapter.

5. For models with variable speed feeder house drive, set header output shaft speed to 520 rpm.

6. Set feeder chain to high speed. For older combines, additional chain links will be required to move chain to larger sprocket at (E). On newer combines the adjustment range allows for this repositioning. Refer to Combine Operator's Manual.

7. Contour Master: To improve performance, move feeder chain as far forward as possible by adding links.

8. Adjust combine feed drum height to GRAIN position. Refer to Combine Operator's Manual.

9. Level Land Prior to 50 Series Feeder House: Attach spline shaft provided with adapter to feeder house L/H output drive as follows:

   7720, 9500, 9510 & CTS

a. Remove existing sprocket coupler.
b. Ensure that the three 3 inch long bolts (C) are just tight enough to eliminate gaps between parts, but no tighter.
c. Position spline shaft & clamp assembly onto shaft and tighten the two 4-1/2 inch long bolts (D) evenly to 80 ft.lbs. (110 N·m).
d. Tighten the three 3 inch long bolts (C) to 80 ft.lbs. (110 N·m).

   8820, 9600 & 9610

a. Remove the three 3 inch long bolts connecting spline shaft (F) to clamp halves.
b. Attach spline shaft (F) directly to sprocket with three 1/2 x 1-1/4 inch bolts and flange nuts provided.

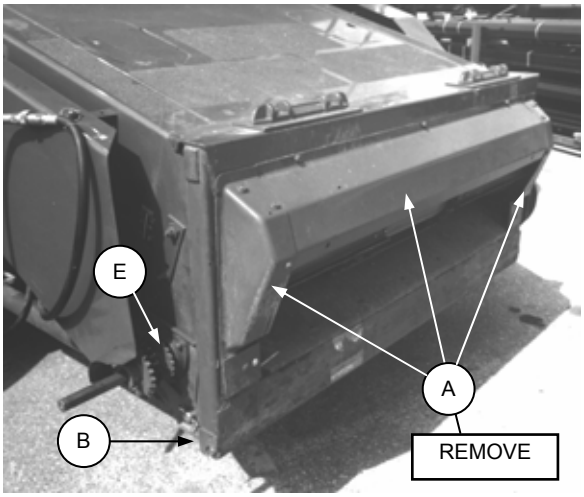

LOCK PINS RETRACTED

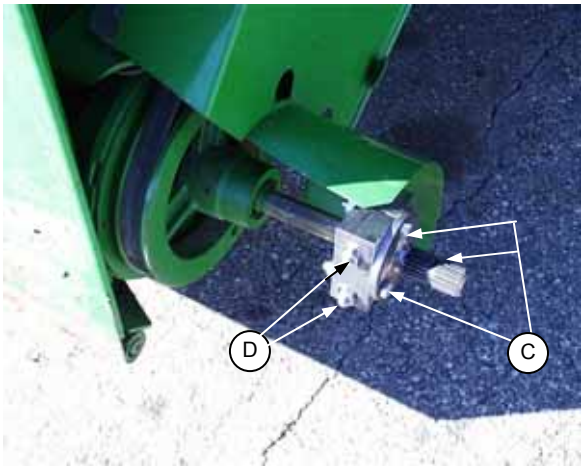

LEVEL LAND PRIOR TO 50 SERIES:
7720, 9500, 9510 & CTS - ATTACH
SPLINE SHAFT & CLAMP

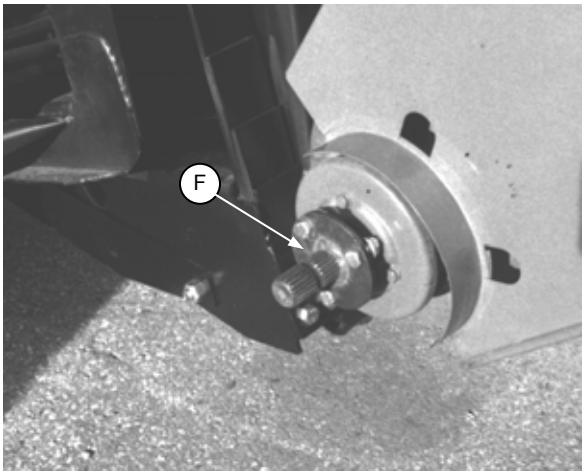

LEVEL LAND PRIOR TO 50 SERIES:
8820, 9600 & 9610
ATTACH SPLINE SHAFT

Adapter Mounting Instructions for John Deere Combines

ATTACHING ADAPTER TO COMBINE

1. Slowly drive combine up to adapter until lift lugs (C) are directly under adapter top cross member.

2. Raise feeder house to lift adapter, ensuring lift lugs are properly engaged. Raise adapter fully.

WARNING: To avoid bodily injury or death from unexpected start-up or fall of raised attachment; stop engine, remove key and engage lift cylinder stop before proceeding with hook-up.

3. Engage lock pins (E) in adapter brackets, both sides. If pins do not align with adapter brackets, add or remove washers at (F), both sides to correct the alignment or loosen bolt (D) and slide bracket up or down to align pin.

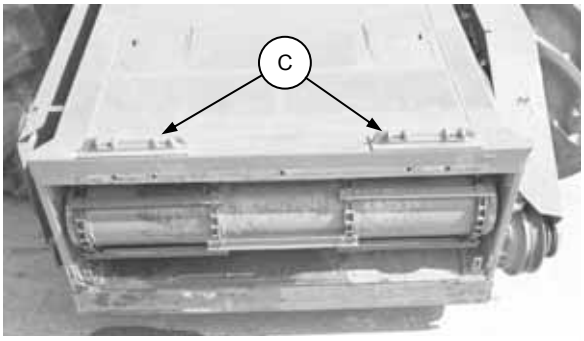

ALIGN LIFT LUGS UNDER ADAPTER FRAME
(50 Series Combine Feeder house shown)

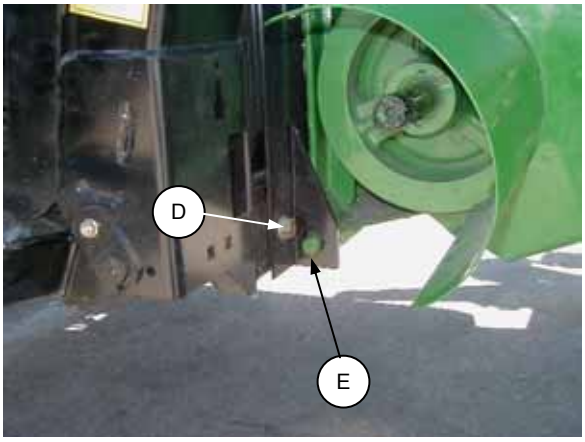

ENGAGE LOCK PINS - BOTH SIDES



ADJUST ALIGNMENT OF PINS
WITH WASHERS

Adapter Mounting Instructions for John Deere Combines

ATTACHING ADAPTER TO COMBINE (continued)

4. Install pump as follows:

CAUTION: Pump may be hot. Wear gloves when handling pump.

a. Remove pump from storage position (A) on adapter and slide pump onto R/H feeder house output shaft.
NOTE: The first time the pump is installed, remove cap from bore of spline coupler. Hoses may have to be loosened for proper alignment. Tighten hoses after installation.

b. Engage pump torque arm on support arm on adapter and secure with lynch pin at (B).

5. Tighten combine feeder chain and check clearances. See page 66, step 6.



PUMP STORED ON ADAPTER FRAME

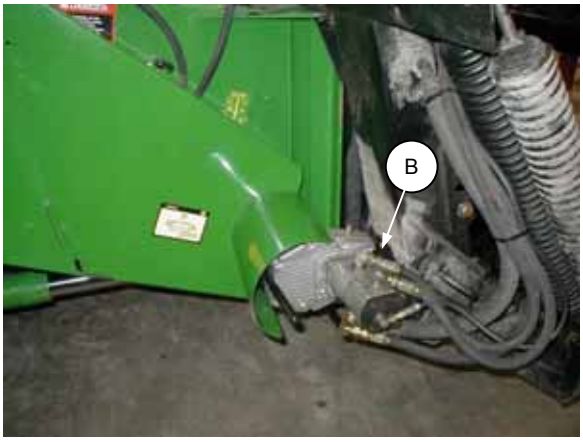

PUMP IN WORKING POSTION
50 SERIES SHOWN

Adapter Mounting Instructions for Lexion Combines

PREPARING THE HEADER

1. Attach the hydraulic/electrical completion package as follows:

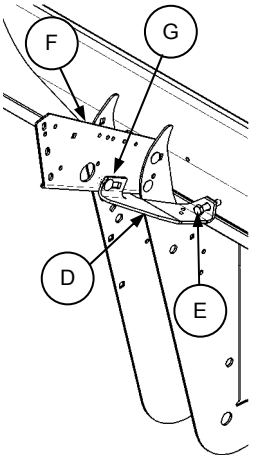

- Mount the coupler bracket provided with the adapter to the inboard flange of the left header leg with two 1/2 x 1 inch carriage bolts and flange nuts at (A). (For 963 Header, coupler bracket bolts to a bracket welded to the header back tube near left side of opening.)
- Attach brace (D) to coupler bracket (F) using 1/2 x 1 inch carriage bolt and flange nut at (G). Ensure brace (D) is tight against backtube and bottom of coupler bracket. Tighten bolt (E) and jam nut after tightening brace to coupler bracket. Bolt (E) should be tight enough to ensure L/H leg of brace is tight against backtube.
- Match the coloured cable ties to connect the header hoses to the multi-link coupler:
  Reel Drive – Yellow to Yellow and White to White.
  Reel Lift – Black to Black
  NOTE: Loosen clamp (C) hardware and remove couplers from underneath (as shipped). Extend hoses and clamp hoses under clamp (C) as shown.
- Mount the Reel Fore-Aft/Header Tilt selector valve (if equipped) to the coupler bracket with two 1/4 x 2-1/2 inch hex bolts and nuts at (B).
- Replace straight hydraulic fitting attached to green cable tied hose at front of block with 45º hydraulic fitting supplied with selector valve.
- Match the coloured cable ties to connect hoses for Reel Fore-Aft/Header Tilt – Red to Red and Green to Green, on the multi link connector.
  NOTE: Depending on year of manufacture of your combine, it may be necessary to switch reel drive couplers (yellow & white) to prevent reel turning backward. Also, reel fore-aft hoses (red & green) may need to be switched for proper operation.

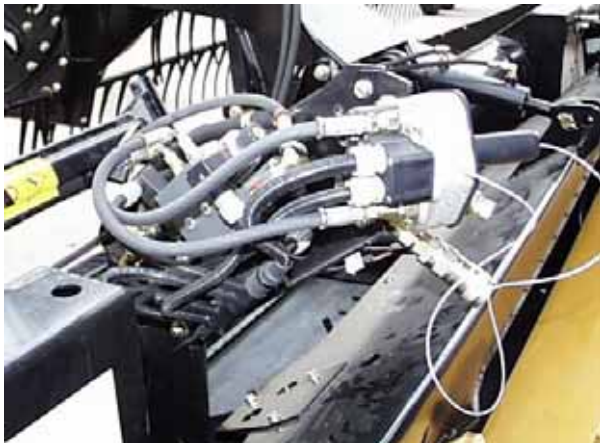

OUTBOARD VIEW

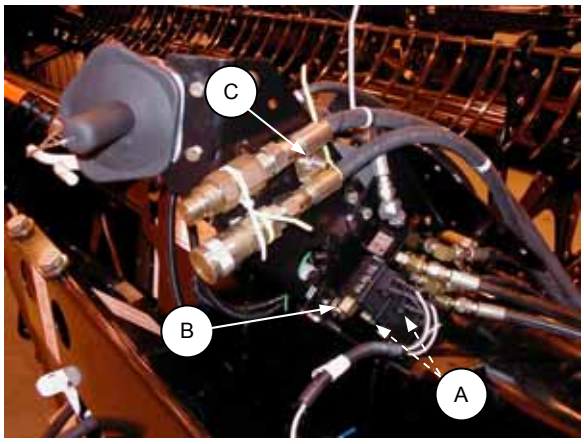

INBOARD VIEW

COUPLER BRACKET AT L/H LEG (400 SERIES COMBINE COUPLER SHOWN)
(500 SERIES COMBINE COUPLERS INCLUDE REEL DRIVE HOSES)

2. Prepare sickle drive as follows:

   963 Headers only: Replace the existing sickle drive belt with belt provided with adapter.

   972/973/974 Headers: Move idler (G) to raised position shown. Belt provided with adapter is not used. Move nut (H) on idler adjusting bolt to lower position shown

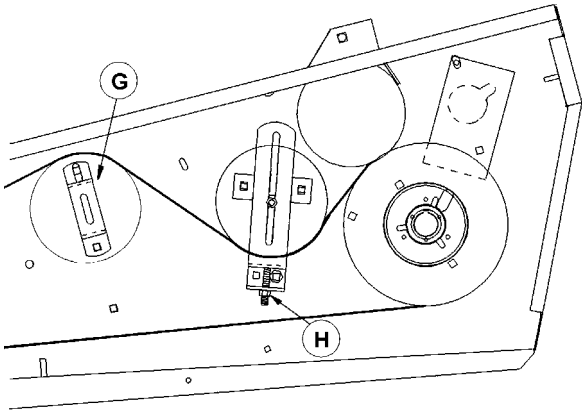

MOVE IDLER PULLEY
972/973/974 HEADERS

Adapter Mounting Instructions for Lexion Combines

PREPARING THE ADAPTER

1. Remove retracting tine drum (RTD) hanger bolts (A) as shown, both sides of adapter. Retain hardware for re-use.
   NOTE: Place RTD around the front-left of adapter frame to allow installation of the feed deck from the front.



CAUTION: Support RTD to avoid injury or damage once bolts are removed.

2. Slide feed deck (B) against back frame member.

3. Lift front of feed deck (B) up so that rear hook (C) engages frame as shown. Pull feed deck forward.
   NOTE: Be sure that rear notch in center of feed deck (B) is properly aligned with tab on frame.

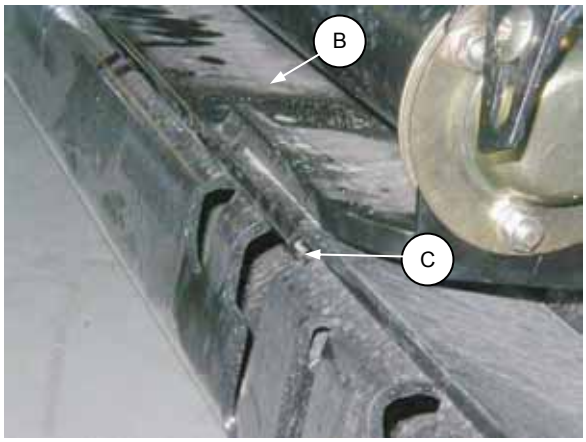

ENSURE HOOK (C) ENGAGES FRAME

4. Re-install RTD into adapter frame, using existing hardware removed in step 1.
   NOTE: Refer to page 45 for proper RTD positioning.

5. Connect feed deck hydraulic hoses to RTD and adapter hydraulic valve block as follows:
   - Disconnect hose end (D) from bottom port of draper drive motor.
   - Disconnect hose end (F) from front port of RTD motor.
   - Connect hose end (D) to front port of RTD motor.
   - Connect hose end (F) to lower port of draper drive motor.

   NOTE: For wide deck adapters, ensure hoses (D & F) are routed behind elbow (E) to prevent crop from hanging up or rubbing on hoses.

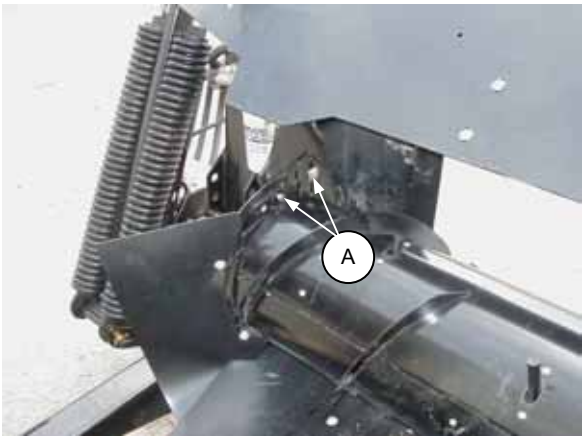

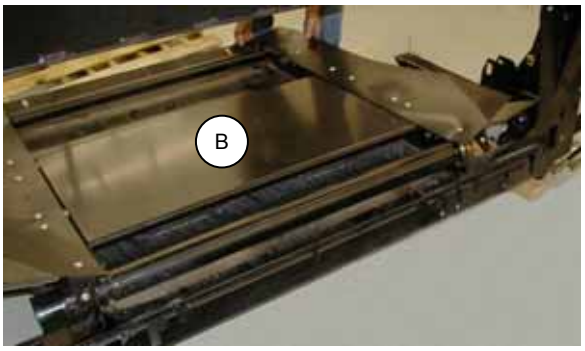



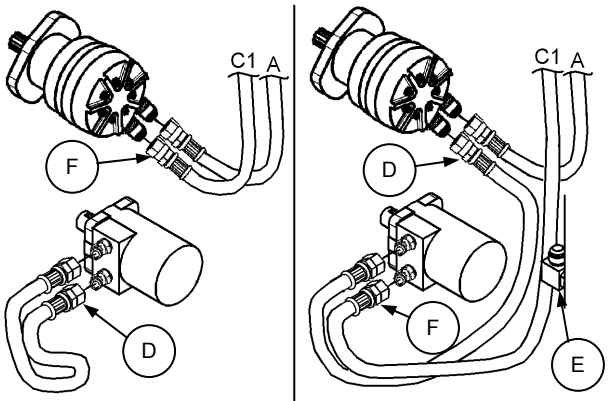

HOSES AS SHIPPED | HOSES AFTER ROUTING

Adapter Mounting Instructions for Lexion Combines

PREPARING THE ADAPTER (cont'd.)

6. Attach rear deflectors (D) to RTD supports using four 3/8 x 3/4 inch carriage bolts and locknuts supplied.
   NOTE: At front two holes, be sure to place lock washers (E) between rear deflector (D) and side deflector as shown. (Front slot hardware removed for photo clarity). Refer to page 41 & 45 for rear deflector opening width.

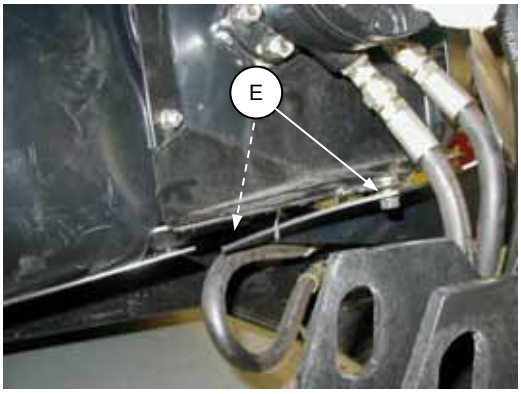

INSTALL DEFLECTOR HARDWARE

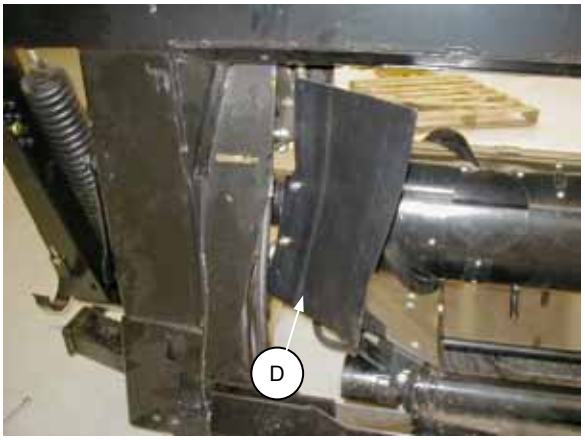

7. Attach front side deflectors (J) to RTD supports with four 3/8 x 3/4 inch carriage bolts and locknuts supplied.

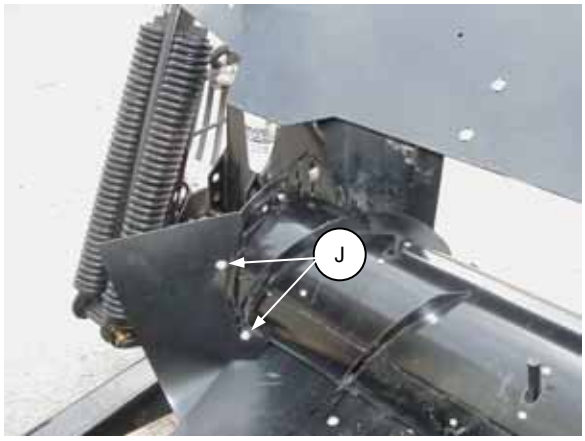

8. **IMPORTANT** – RTD is pre-assembled with a total of 23 fingers.
   To improve feeding for Lexion 460, 465, 480, 480R, 485, 485R & 590R combines, a total of 8 additional fingers have to be added.
   Add fingers to RTD as follows:
   - ❑ Remove outermost RTD opening covers (B) at each end (retain hardware (A) for re-use).
   - ❑ Add four outermost hairpins (C), fingers (D) and guides (G) per side (retain hardware E & F for re-use).

   NOTE: Ensure hairpins (C) are installed in same direction as factory installed hairpins.

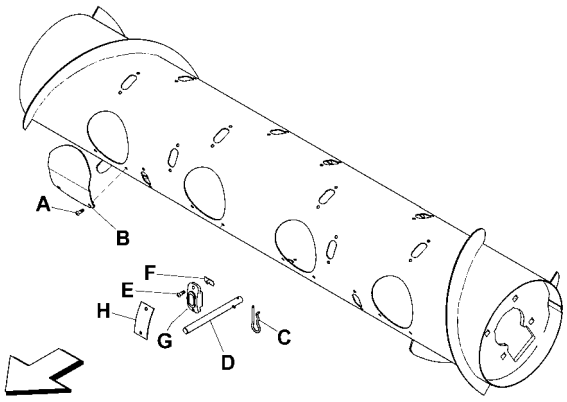

9. Install four finger hole covers (H) per side (supplied) using hardware (E) & (F) removed above.

10. Install RTD opening covers (B) using hardware (A) removed in step 8.

Adapter Mounting Instructions for Lexion Combines

PREPARING THE ADAPTER (cont'd.)

11. Secure pump in storage position on R/H side of adapter frame using lynch pin (L).
    NOTE: Fittings and hoses may need to be re-orientated to secure for proper storage.

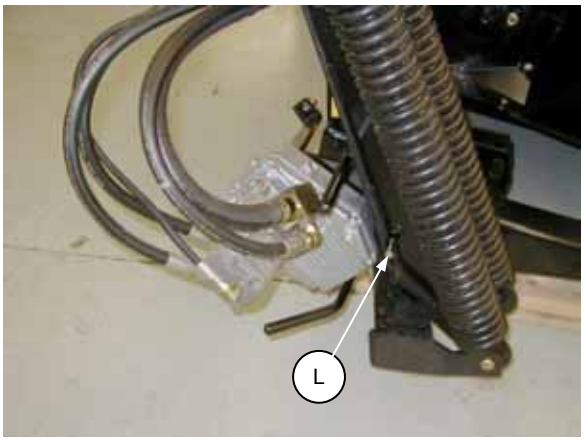

SECURE PUMP IN STORAGE POSITION

12. Lower latch handle (A) to retract lower pins. This also rotates upper latches to raised position.

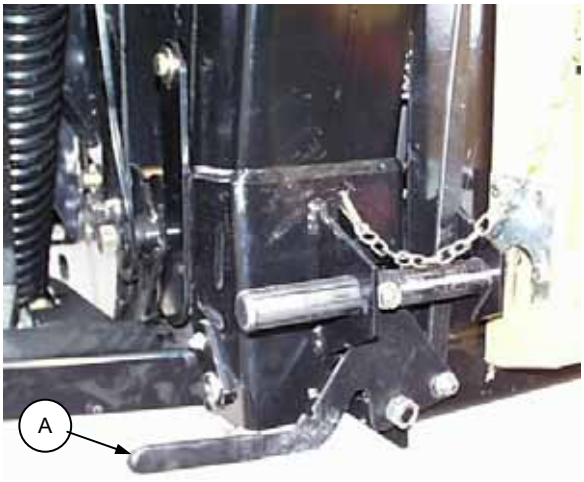

LOWER HANDLE TO RETRACT PINS

Adapter Mounting Instructions for Lexion Combines

PREPARING THE COMBINE

1. Check with Combine dealer to ensure combine is equipped with tire size, rear ballast etc. to carry larger headers.

2. Combine must be equipped with reel drive pump.

3. For Standard Feeder House Combines:
   NOTE: For Header Pitch Feeder House Combines proceed to step 4.
   Attach pump support arm (C – straight support – narrow standard feeder house) or (D – bent support – wide standard feeder house) to right side of combine feeder house faceplate as follows:
   NOTE: Slot in support arm (C) or (D) must line up with frame pivot.

   - Remove bolt on shield from plastic shield on R/H side of feeder house.
   - Cut 5-1/2" (140mm) hole in plastic shield as shown.
   - Remove plate and inner bar from feeder house. Retain lockwashers and nuts for re-use, discard bolts. Replace inner bar and install support (C) or (D) against feeder house. Replace plate (H) on outside.
   - Secure with M10 x 35 mm hex head bolts at (F) and new M10 x 45 mm hex head bolts at (G), reusing lockwashers and nuts from above.
   - Use straight support (C) shown in photo for narrow standard feeder house model combines.
   - Use offset support (D) shown in illustration for wide standard feeder house model combines.

   IMPORTANT: Damage to combine and adapter may occur if support arm (C) or (D) is not sandwiched between feeder house and notched plate (H).

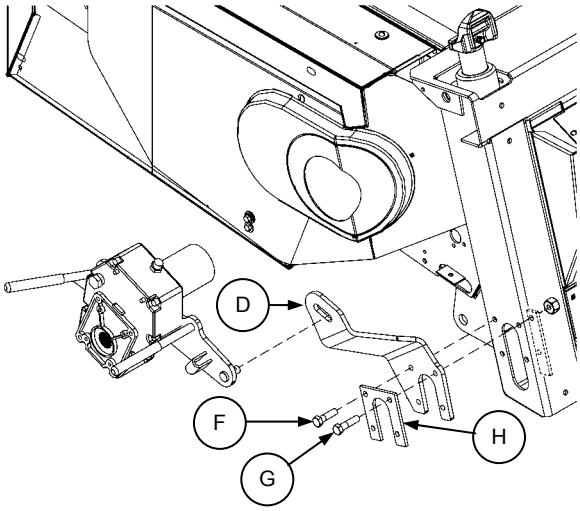

INSTALL PUMP SUPPORT ARM
STANDARD - WIDE FEEDER HOUSE

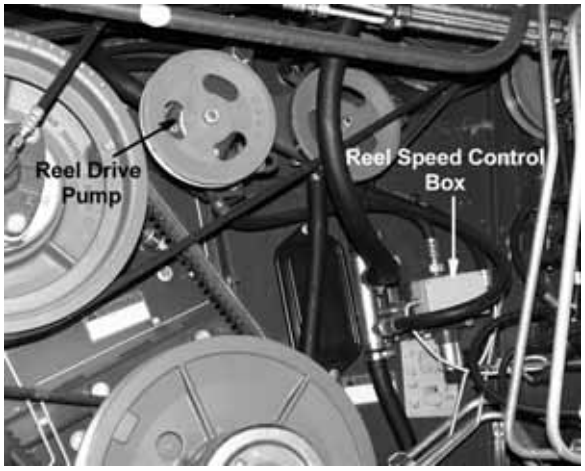

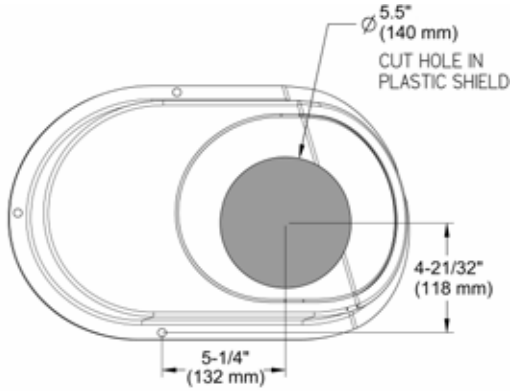

COMBINE SHIELD CUTTING

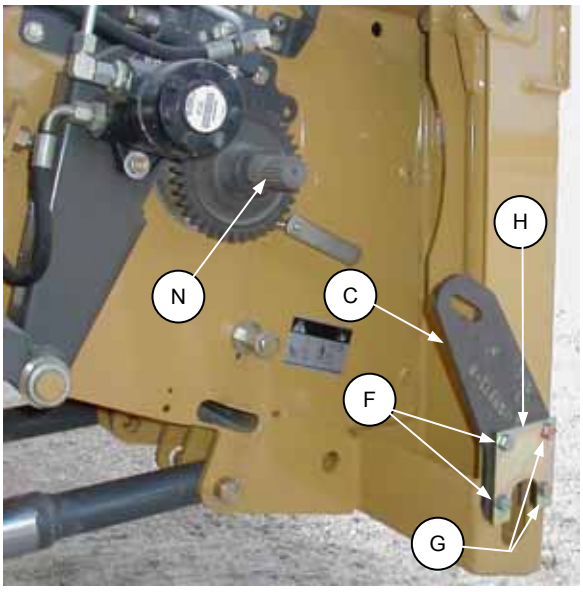

INSTALL PUMP SUPPORT ARM
STANDARD - NARROW FEEDER HOUSE

Adapter Mounting Instructions for Lexion Combines

PREPARING THE COMBINE (continued)

4. For Header Pitch (HP) Feeder House Combines:
   Attach pump support arm (F – bent support – narrow & wide header pitch feeder house) to right side of combine feeder house tilting frame as follows:
   NOTE: For Standard Feeder House Combines return to step 3.
   - Remove bolt on shield from plastic shield on R/H side of feeder house.
   - Cut 5-1/2" (140mm) hole in plastic shield as shown.
   - Mount the pump support arm (F), using two 1/2 x 2 inch hex head bolts (K) and 1/2 inch locknuts inserted through two holes, combine feeder house and backing plate (M) as shown.
     NOTE: For wide header pitch feeder house combines, install second backing plate (M) on outside of feeder house sandwiched between the bent support (F) and feeder house.

     NOTE: Slot in support arm (F) must line up with frame pivot.

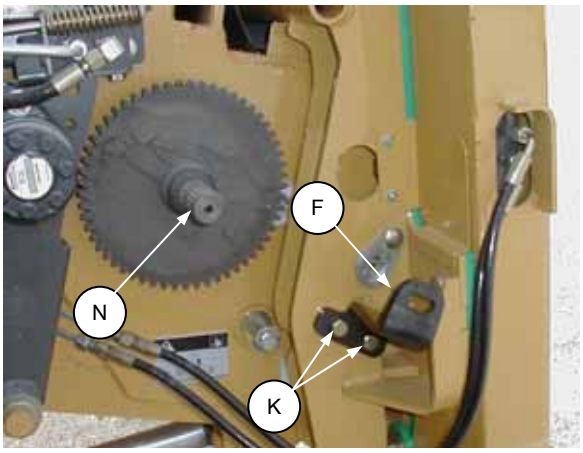

INSTALL SUPPORT ARM
HP – FEEDER HOUSE

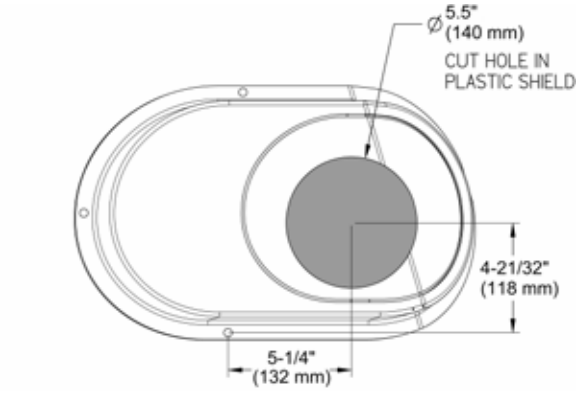

COMBINE SHIELD CUTTING

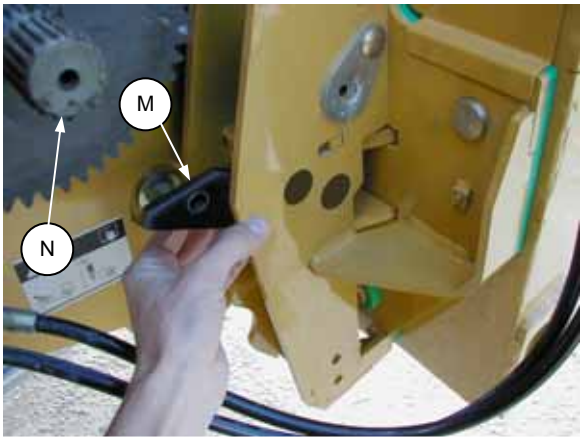

INSTALL BACKING PLATE
HP - NARROW FEEDER HOUSE

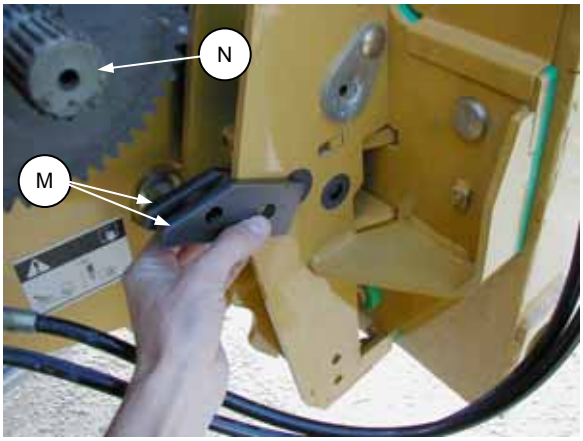

INSTALL TWO BACKING PLATES
HP – WIDE FEEDER HOUSE

Adapter Mounting Instructions for Lexion Combines

PREPARING THE COMBINE (continued)

5. Set variable speed header drive at 750 RPM, measured at shaft (N – shown on previous pages).

6. Check that auto-contour cylinders on the feeder house are level and showing about 1-1/2 inches (38 mm) of the cylinder.
   NOTE: For CAC feeder houses, remove bars (G) at float slot, both sides. For non-CAC feeder houses, bars (G) are required.

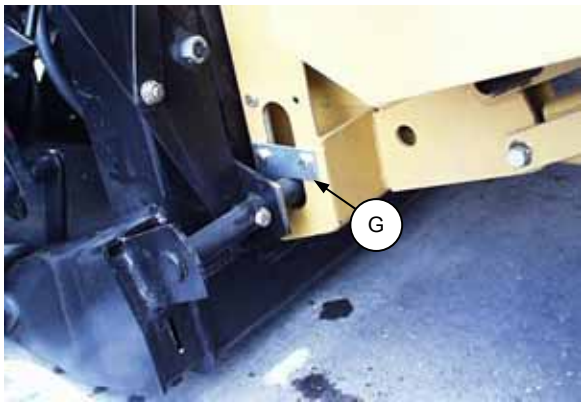

REMOVE BARS – C.A.C. FEEDER

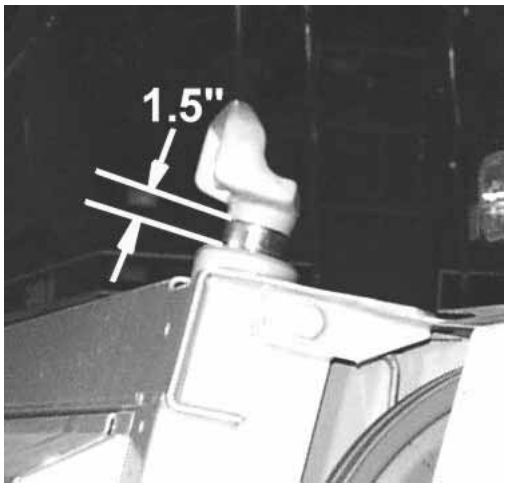

1-½" EXPOSED CYLINDER FOR CAC FEEDER

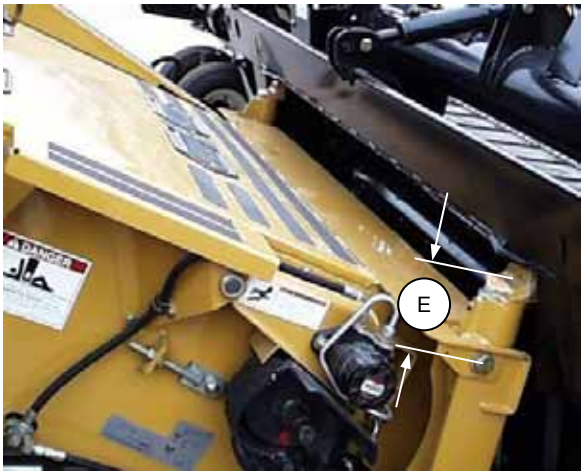

DIMENSION E = 148 mm FOR NON CAC

7. For non-CAC feeder houses, check that dimension (E) is 148 mm (5.83"). (Center of bolt head to center of cradle point.) This dimension may be 103 mm (4.05"). If so, modify header mounts per Service Bulletin 9943, or order kit B4208 from your MacDon Dealer.

8. Set feeder house lift cylinder springs to match weight of header.

9. Set feeder house drum to grain position as shown below.

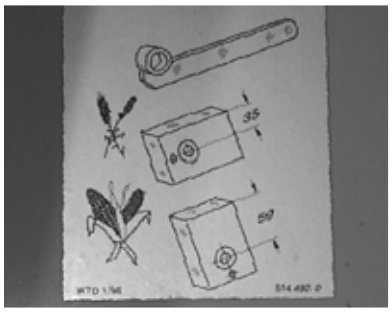

Adapter Mounting Instructions for Lexion Combines

ATTACHING ADAPTER TO COMBINE

1. Slowly drive combine up to adapter until lift lugs (C) are hooked behind upper latches on adapter.

2. Raise feeder house to lift adapter, ensuring lift lugs are properly engaged. Raise adapter fully.

WARNING: To avoid bodily injury or death from unexpected start-up or fall of raised attachment; stop engine, remove key and engage lift cylinder stop before proceeding with hook-up.

3. Lift handle (B) upward to engage lower pins (A).

4. Install pump as follows:

CAUTION: Pump may be hot. Wear gloves when handling pump.

a. Remove pump from storage position (D) on adapter and slide pump onto R/H feeder house output shaft.
NOTE: The first time the pump is installed, remove cap from bore of spline coupler. Hoses may have to be loosened for proper alignment. Tighten hoses after installation.

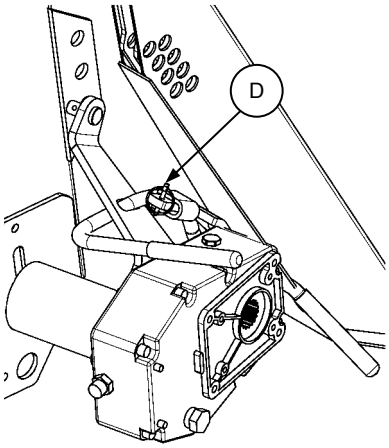

PUMP STORED ON ADAPTER FRAME

b. Engage pump torque arm on support arm on adapter and secure with lynch pin at (E).

5. Tighten combine feeder chain and check clearances.



ALIGN LIFT LUGS WITH TOP LATCHES

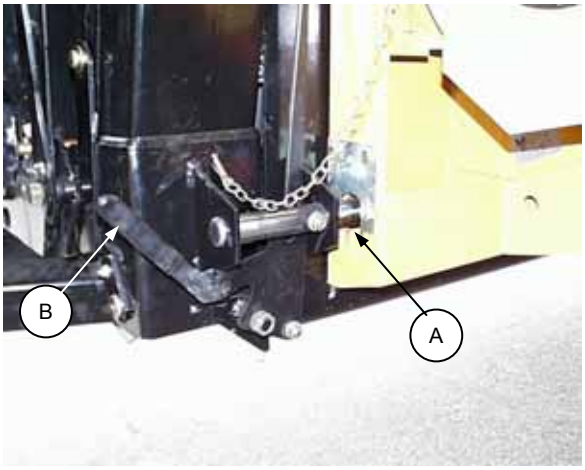

ENGAGE LOWER PINS

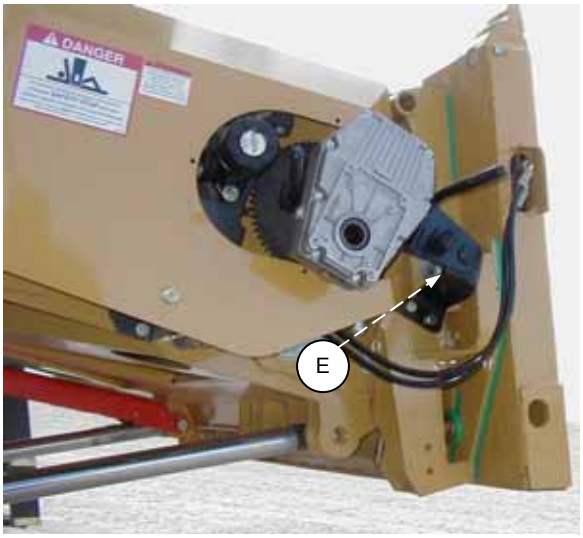

PUMP IN WORKING POSITION
(HP FEEDER HOUSE SHOWN)

Adapter Mounting Instructions for Lexion Combines

COMBINE TO HEADER CONNECTIONS – RIGHT SIDE



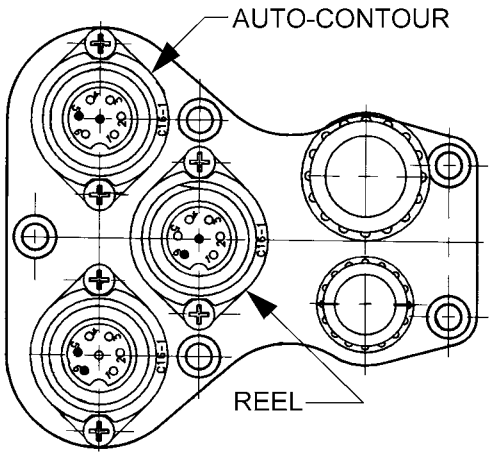

AUTO REEL SPEED/HEIGHT AND
AUTO CONTOUR PORT CONNECTIONS

SYMPTOM	PROBLEM	SOLUTION	REF.
Reel will not lift but hydraulic lines from combine flex when up/down button is pressed.	Multi-Link connector not threaded on completely or too loose.	Tighten multi-link connector.	
	Pressure and return improperly connected.	Correct hydraulic hose connections: The multi-block port closest to the hanger hook connects to the “T” port on valve block.	
Reel speed shows 0.0 in cab.	Reel speed sensor not picking up on sprocket.	Set sensor as follows: Turn sensor in until it touches a sprocket tooth, then back it off 3/4 of a turn. If sensor is unable to touch sprocket, bend bracket as required.	
	Reel speed sensor is improperly wired.	Plug wiring harness from reel sensors into the middle port of the three ports in the multi-block. See below	
Unable to manually change reel speed, but getting a reel speed read-out in the cab.	Fuse blown in combine.	Check fuses carefully.	
Fuse in combine continues to blow when changing reel speed or height	A wire is grounding out.	Inspect header sensors and complete wiring harness Disassemble multi-block and inspect internal wires. Check wiring in combine.	

Adapter Mounting Instructions for Agco Combines

PREPARING THE HEADER

1. Attach the hydraulic/electrical completion package as follows:

- Mount the coupler bracket provided with the adapter to the inboard flange of the left header leg with two 1/2 x 1 inch carriage bolts and flange nuts at (A). (For 963 Header, coupler bracket bolts to a bracket welded to the header back tube near left side of opening.)

- Attach brace (D) to coupler bracket (F) using 1/2 x 1 inch carriage bolt and flange nut at (G). Ensure brace (D) is tight against backtube and bottom of coupler bracket. Tighten bolt (E) and jam nut after tightening brace to coupler bracket. Bolt (E) should be tight enough to ensure L/H leg of brace is tight against backtube.

- Match the coloured cable ties to connect the header hoses to the coupler bracket:
  Reel Drive – Yellow to Yellow and White to White.
  Reel Lift – Black to Black.

- After attaching to combine, reposition hoses in clamps for best fit-up to combine connection points.

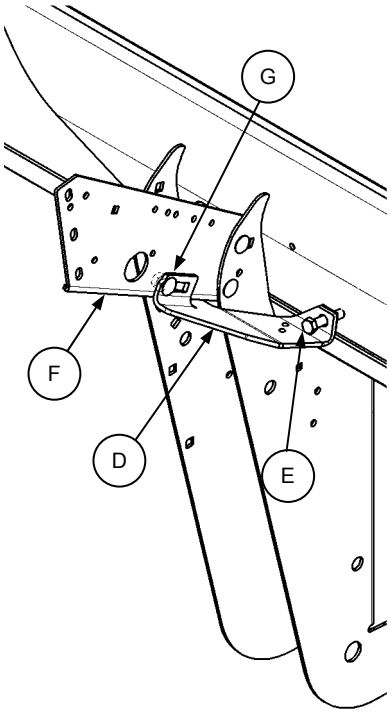

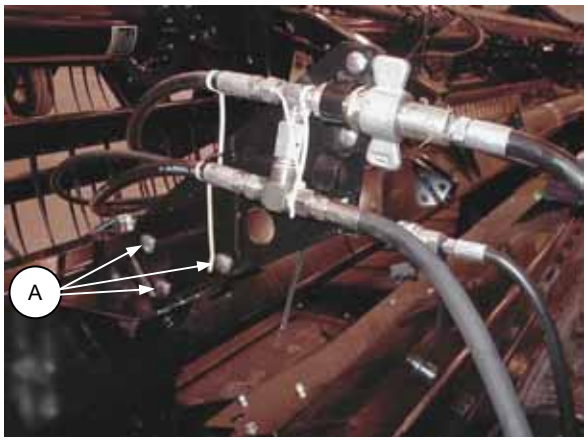



OUTBOARD VIEW INBOARD VIEW

ATTACH REEL DRIVE MOUNTING PLATE TO HEADER L/H LEG
(SHOWN WITH UPPER CROSS AUGER SHIELDING PACKAGE INSTALLED)

Adapter Mounting Instructions for Agco Combines

PREPARING THE ADAPTER

1. Remove retracting tine drum (RTD) hanger bolts (A) as shown, both sides of adapter. Retain hardware for re-use.
   NOTE: Place RTD around the front-left of adapter frame to allow installation of the feed deck from the front.



CAUTION: Support RTD to avoid injury or damage once bolts are removed

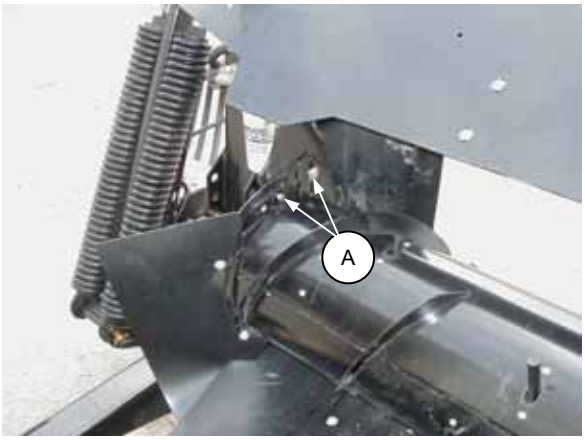

2. Slide feed deck (B) against back frame member.
   NOTE: Remove supports (Y) and loosen hardware (Z) for lower adapter plate prior to sliding deck into place.

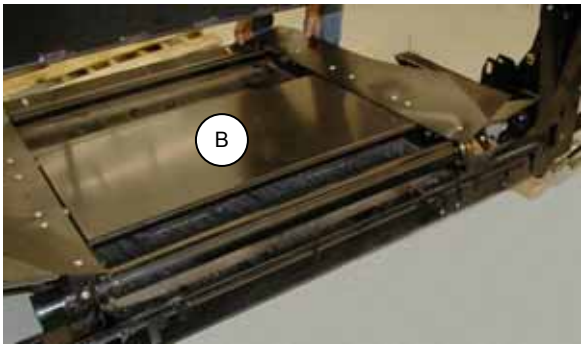

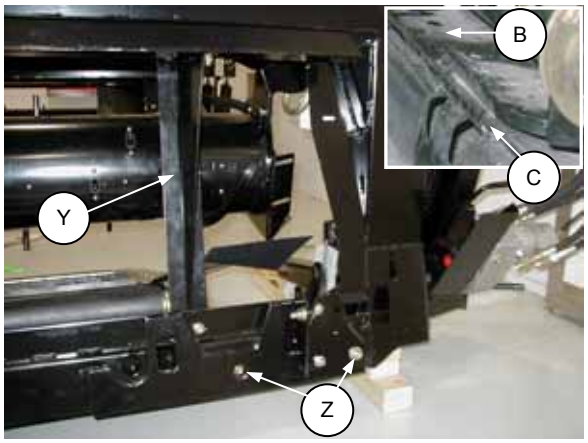

ENSURE HOOK (C) ENGAGES FRAME



3. Lift front of feed deck (B) up so that rear hook (C) engages frame as shown. Pull feed deck forward.
   NOTE: Be sure that rear notch in center of feed deck (B) is properly aligned with tab on frame.

4. Re-install RTD into adapter frame, using existing hardware removed in step 1.
   NOTE: Refer to page 45 for proper RTD fore-aft positioning.

5. Connect feed deck hydraulic hoses to RTD and adapter hydraulic valve block as follows:
   - Disconnect hose end (D) from bottom port of draper drive motor.
   - Disconnect hose end (F) from front port of RTD motor.
   - Connect hose end (D) to front port of RTD motor.
   - Connect hose end (F) to lower port of draper drive motor.

   NOTE: For wide deck adapters, ensure hoses (D & F) are routed behind elbow (E) to prevent crop from hanging up on hoses.

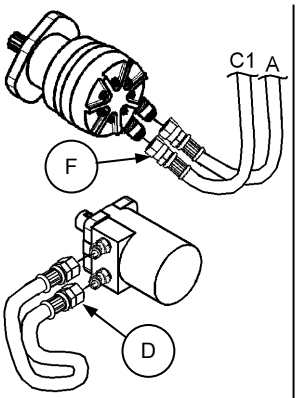

HOSES AS SHIPPED

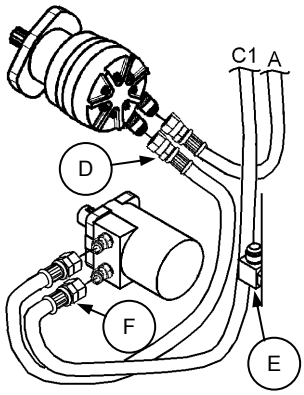

HOSES AFTER ROUTING

Adapter Mounting Instructions for Agco Combines

PREPARING THE ADAPTER (cont'd.)

6. Attach rear deflectors (D) to RTD supports using four 3/8 x 3/4 inch carriage bolts and locknuts supplied.
   NOTE: At front two holes, be sure to place lock washers (E) between rear deflector (D) and side deflector as shown. (Front slot hardware removed for photo clarity). Refer to page 41 & 45 for rear deflector opening width.
   NOTE: Trim left hand rear deflector for narrow deck Agco applications as shown.

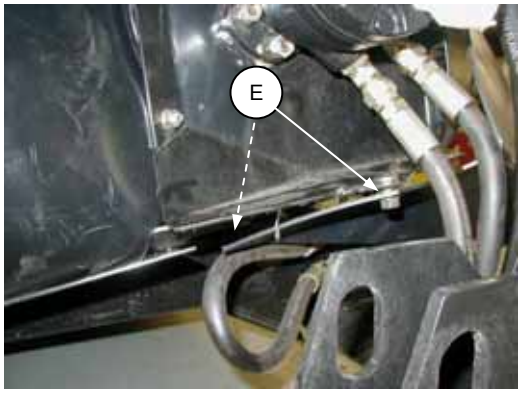

INSTALL DEFLECTOR HARDWARE

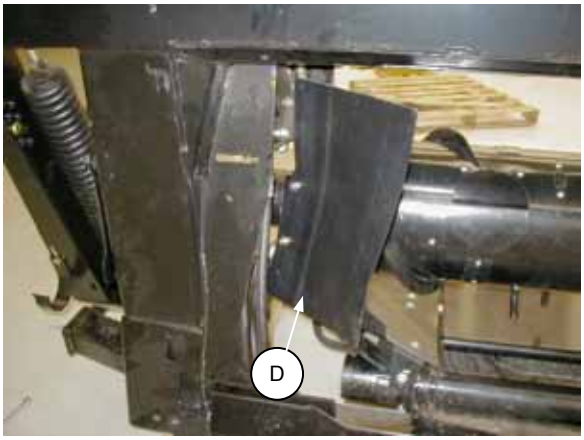

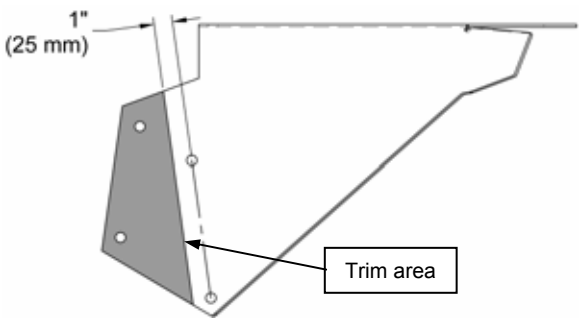

TRIM L/H REAR DEFLECTOR (NARROW DECK ONLY)

7. Attach front side deflectors (J) to RTD supports with four 3/8 x 3/4 inch carriage bolts and locknuts supplied.

8. **IMPORTANT** – RTD is pre-assembled with a total of 21 fingers.
   To improve feeding for Challenger 670 & Massey Ferguson 9790 combines, a total of 6 additional fingers have to be added.
   Add fingers to RTD as follows:
   - ❑ Remove outermost RTD opening covers (B) at each end (retain hardware (A) for re-use).
   - ❑ Add three outermost hairpins (C), fingers (D) and guides (G) per side (retain hardware E & F for re-use).

   NOTE: Ensure hairpins (C) are installed in same direction as factory installed hairpins.

9. Install three finger hole covers (H) per side (supplied) using hardware (E) & (F) removed above.

10. Install RTD opening covers (B) using hardware (A) removed in step 8.

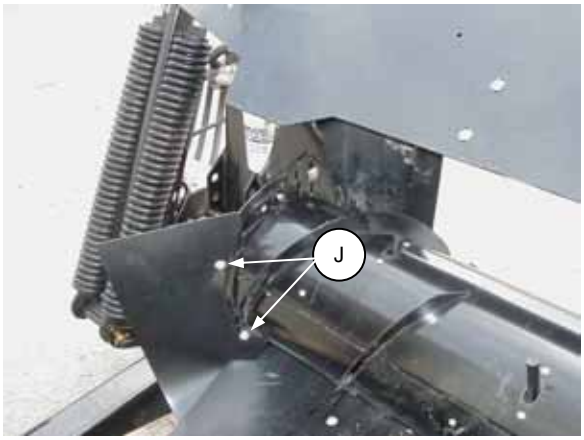

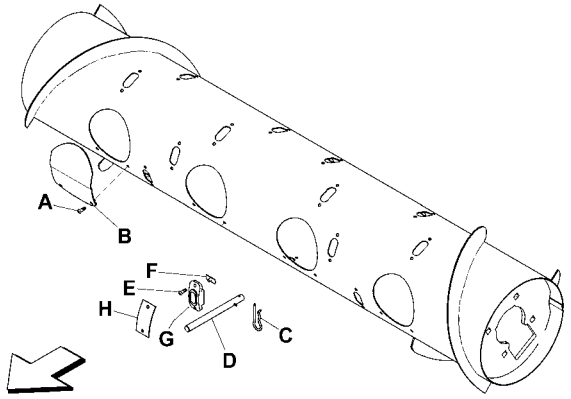

Adapter Mounting Instructions for Agco Combines

PREPARING THE ADAPTER (cont'd.)

11. Secure pump in storage position on R/H side of adapter frame using lynch pin (L).
    NOTE: Fittings and hoses may need to be re-orientated to secure for proper storage.

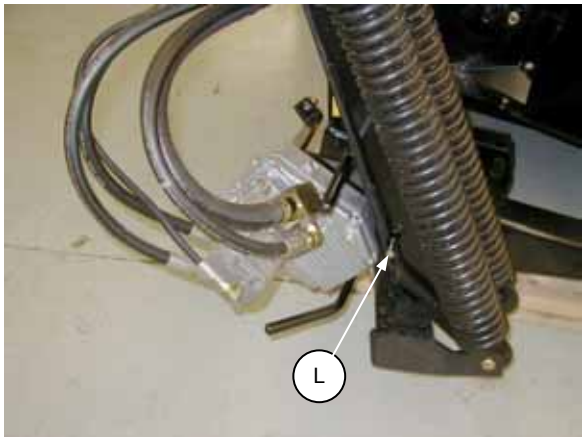

Adapter Mounting Instructions for Agco Combines

ADAPTER COMPLETION – GLEANER COMBINES:

1. Install upper beam (1) (from adapter package) onto the adapter frame with two 1/2 x 1 inch flange bolts (E) (one each side) and four 1/2 x 1 inch carriage bolts (C) and flange nuts (D) (two each side).
   NOTE: For attachment to adapter at top beam, engage carriage bolts (C) in keyhole slots.

2. Attach left member (2) with three 1/2 x 1 inch carriage bolts (C), one 1/2 x 1 inch flange bolt (E) and flange nuts (D). Repeat at right side.

3. Insert lower latch support (4) onto adapter frame as shown. Secure with 5/8 x 1-1/4 inch carriage bolt (B), 5/8 x 2-1/2 inch carriage bolt (A) and flange lock nuts (F). Repeat at other side.

4. Install shields and other components.

A	BOLT – rnd hd, sq nk, 5/8 NC x 2-1/2"
B	BOLT – rnd hd, sq nk, 5/8 NC x 1-1/4"
C	BOLT – rnd hd, sq nk, 1/2 NC x 1"
D	NUT – lock, smth flng, 1/2 NC dist thd
E	BOLT – hex hd, serr flng, 1/2 NC x 1"
F	NUT – smth flng, 5/8 NC dist thread
G	BOLT – rnd hd, sq nk, 1/2 NC x 1-1/4"
H	BOLT – hex head, 5/8 NC x 1-1/2 inch
J	BOLT – hex hd, M12 x 1-3/4 x 25 long
K	WASHER – spring lock
P	BOLT – rnd hd, sq nk, 3/8 NC x 3/4
Q	NUT – smth flng, 3/8 NC dist thread
R	BOLT – hex head, 3/8 NC x 1-1/2 inch
S	BOLT – rnd hd, sq nk, 3/8 NC x 1 inch

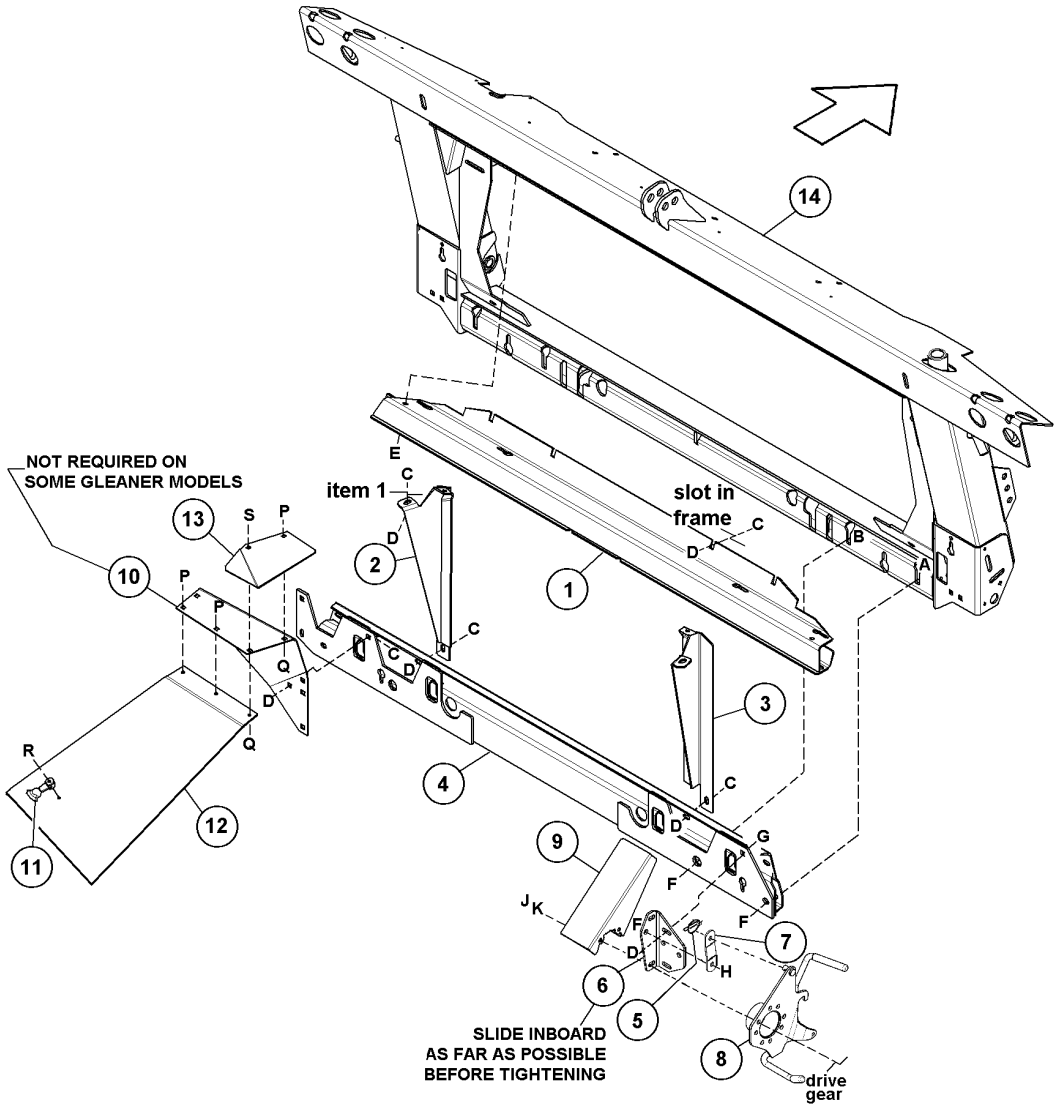

Adapter Mounting Instructions for Agco Combines

ADAPTER COMPLETION – CHALLENGER & MASSEY FERGUSON COMBINES:

1. Install upper beam (1) (from adapter package) onto the adapter frame with two 1/2 x 1 inch flange bolts (E) (one each side) and four 1/2 x 1 inch carriage bolts (C) and flange nuts (D) (two each side).
   NOTE: For attachment to adapter at top beam, engage carriage bolts (C) in keyhole slots.

2. Attach left member (2) with three 1/2 x 1 inch carriage bolts (C), one 1/2 x 1 inch flange bolt (E) and flange nuts (D). Repeat at right side.

3. Insert lower latch support (4) onto adapter frame as shown. Secure with 5/8 x 1-1/4 inch carriage bolt (B), 5/8 x 2-1/2 inch carriage bolt (A) and flange lock nuts (F). Repeat at other side.

4. Install shields and other components.
   **** NOTE:** Mount gearbox torque arm for appropriate feeder house.
   Ex. Fixed speed or Variable Speed.

A	BOLT – rnd hd, sq nk, 5/8 NC x 2-1/2”
B	BOLT – rnd hd, sq nk, 5/8 NC x 1-1/4”
C	BOLT – rnd hd, sq nk, 1/2 NC x 1”
D	NUT – lock, smth flng, 1/2 NC dist thd
E	BOLT – hex hd, serr flng, 1/2 NC x 1”
F	NUT – smth flng, 5/8 NC dist thread
G	BOLT – rnd hd, sq nk, 1/2 NC x 1-1/4”
H	BOLT – hex head, 5/8 NC x 1-1/2 inch
J	BOLT – hex hd, M12 x 1-3/4 x 25 long
K	WASHER – spring lock
P	BOLT – rnd hd, sq nk, 3/8 NC x 3/4
Q	NUT – smth flng, 3/8 NC dist thread
R	BOLT – hex head, 3/8 NC x 1-1/2 inch
S	BOLT – rnd hd, sq nk, 3/8 NC x 1 inch

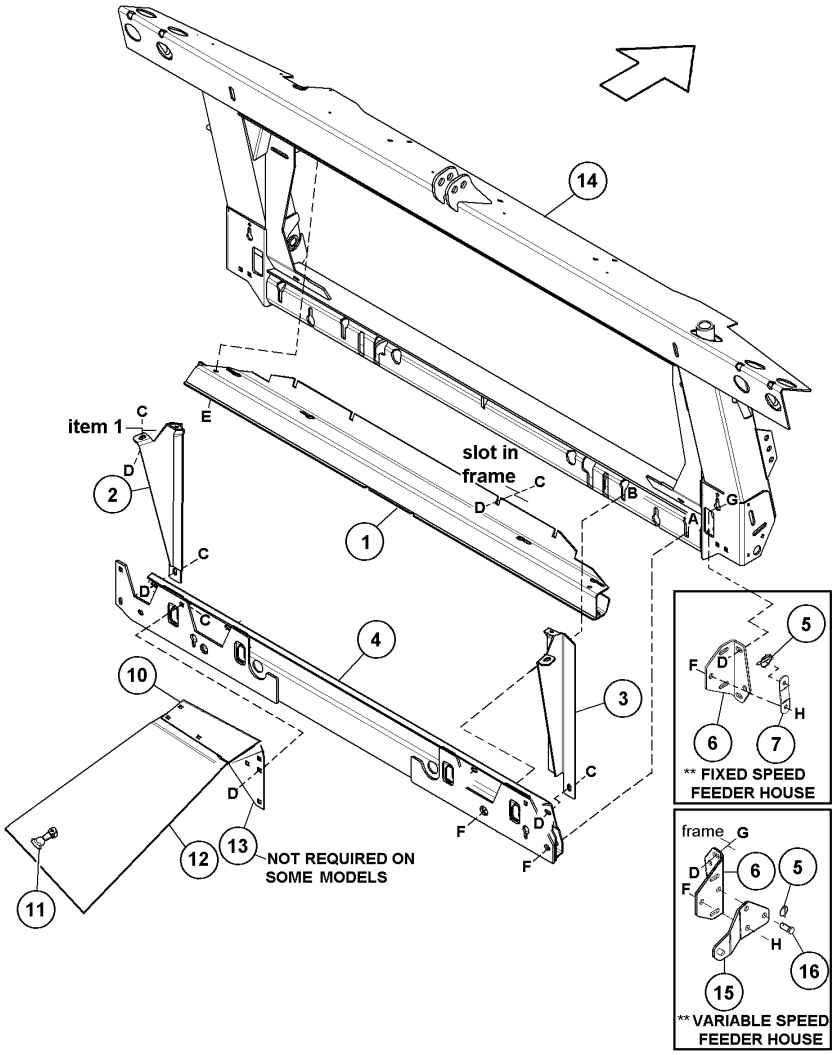

Adapter Mounting Instructions for Agco Combines

PREPARING THE COMBINE

1. For R62 combines, check with Combine dealer to ensure combine is equipped with tire size, rear ballast etc. to carry larger headers.

2. Rotate feeder house latches back into the feeder house.

3. Adjust R/H pivot shaft drive for grain. Position belt on small drive sheave (top) and large drive sheave (bottom).

4. Adjust feed conveyor drum height to small grains position as per combine operators manual.

5. Pre 1997 combines, tilt feeder house face plate 3/4 of the way back towards the cab. For 1998 and newer the faceplate is rigid and cannot be tilted.

6. For models with variable speed feeder house drive, set header output shaft speed to 620 rpm.

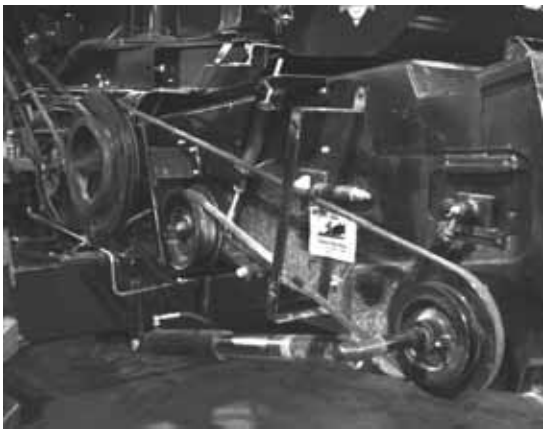



Adapter Mounting Instructions for Agco Combines

ATTACHING ADAPTER TO COMBINE

1. Slowly drive combine up to adapter until feeder house truss hooks (C) are directly under adapter top cross member.

2. Raise feeder house to lift adapter, ensuring truss hooks are properly engaged in adapter frame. Raise adapter fully, allowing the lower pins to penetrate the holes in the adapter back.

WARNING: To avoid bodily injury or death from unexpected start-up or fall of raised attachment; stop engine, remove key and engage lift cylinder stop before proceeding with hook-up.

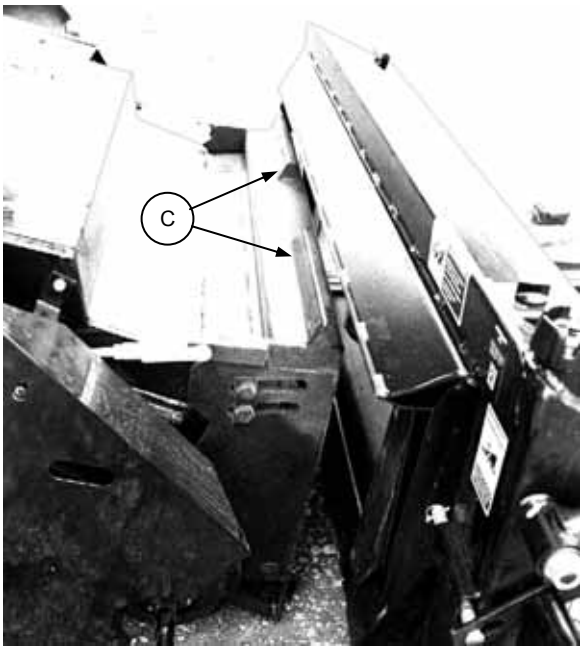

ALIGN TRUSS HOOKS
UNDER ADAPTER FRAME

3. Insert concave door tool (E) in latch socket (F) and rotate latch clockwise to lock hooks (G) into the adapter frame (both sides). MAKE CERTAIN that the latch is rotated over-center to securely lock the hooks. If it does not latch, check to determine if the lower pins (H) are seated in the adapter back. If not, place a block under the left end of the adapter and lower the adapter to reseat the pins. Re-latch the hooks.

4. Raise the adapter and lower it against the ground a few times to settle the adapter on the feeder housing.

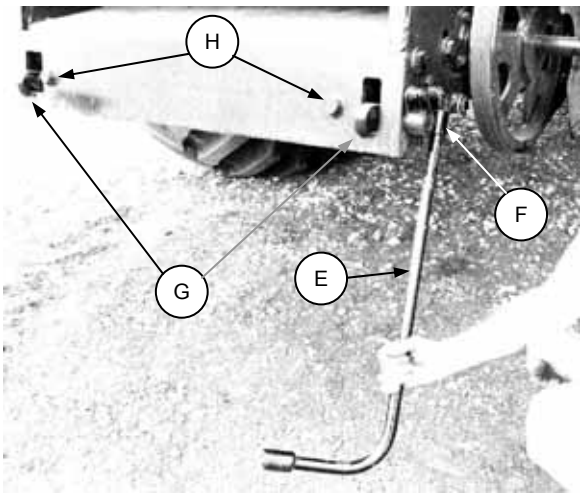

LOCK HOOKS INTO ADAPTER FRAME
BOTH SIDES

Adapter Mounting Instructions for Agco Combines

ATTACHING ADAPTER TO COMBINE (continued)

5. Install pump as follows:

CAUTION: Pump may be hot. Wear gloves when handling pump.

a. Remove pump from storage position (A) on adapter and slide pump onto R/H feeder house output shaft.

NOTE: The first time the pump is installed, hoses may have to be loosened for proper alignment. Tighten hoses after installation.

b. Engage pump torque arm on support arm on adapter and secure with lynch pin at (B).
NOTE: If gear drive will not slide on shaft enough to engage lynch pin (B), slide anchor to the right until pin can be engaged.

IMPORTANT: Damage to the spline on the combine may occur if anchor is adjusted too far to the right, causing the gear drive spline to not fully engage on the combine spline.



6. Float the feeder house front drum up and check for interference with adapter feed drum. If so, remove a link from the feeder chain and move the front drum back. Re-tighten chain and check clearance again.

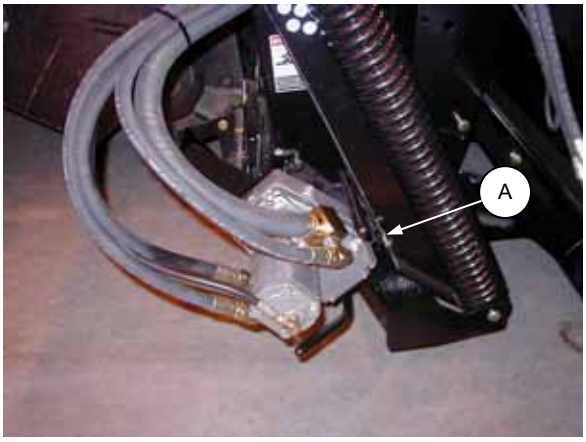

PUMP STORED ON ADAPTER FRAME



PUMP IN WORKING POSITION
(FIXED SPEED FEEDER HOUSE)

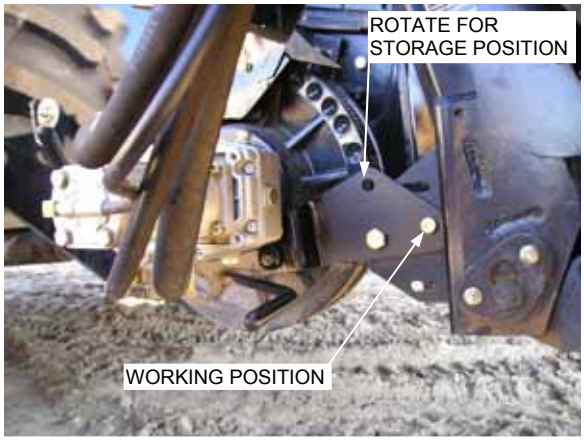

PUMP IN WORKING POSITION
(VARIABLE SPEED FEEDER HOUSE)
(SHIELDING REMOVED FOR CLARITY)

INDEX

A

PAGE

Assembly 39
Attaching Header and Adapter to Combine ... 16
Attaching Header to Combine and Adapter 8
Attachments 38

B

Bearing Installation 23
Break-In Period 17

C

Capacities, Enclosed Drive 22
Center Link 44
Combine Adapter Mounting Instructions:
- CASE IH, 60, 77 & 80 Series 51
- CASE AFX 54
- NEW HOLLAND CR, CX 54
- JOHN DEERE 58
- LEXION 70
- AGCO 79

D

Deflector Adjustments 41
Delivery Opening Width – Initial Setting 47
Delivery Opening Width – Widening 23
Detaching Header and Adapter from Combine 15
Detaching Header from Combine and Adapter 13
Draper Speed Control 17
Draper Speed Flow Control Relief Pressure 30
Drum – Retracting Tine 32

F

Feed Pan Clearance Adjustment 24
Float Indicator (Attachment) 38
Float Optimizer (Attachment) 38

G

Gearbox Lubrication 31
Greasing the Adapter 26

H

PAGE

Header Angle 23
Header Flotation 18
Header Levelling 22
Hydraulic Hoses and Lines 28
Hydraulic Oil 29
Hydraulic Oil Filter 29
Hydraulic Schematic 28
Hydraulic System Safety 28

L

Lubricants, recommended 25

M

Maintenance Record 34
Maintenance Schedule 33

S

Safety
- Alert Symbol 6
- Hydraulic System 28
- Service Procedures 25
- Signal Words 6
- Signs 7

Serial Number Location 3
Service Procedures 25
Specifications 3

T

Trouble Shooting
- Feeding 35
- Flotation 36
- Hydraulics 35

W

Windrowing 24

873 Combine Adapter Pre-Delivery Checklist

ADAPTER SERIAL NUMBER _____

Perform these checks and adjustments prior to delivery to your customer. See the Operator's Manual for adjustment details.



CAUTION: Carefully follow the instructions given. Be alert for safety related messages which bring your attention to hazards and unsafe practices.

- ❑ Check for shipping damage or missing parts.
- ❑ Check float spring and down stop configuration. Adjust to suit header/combine combination if necessary. (P. 39)
- ❑ Check that position of adapter side deflectors aligns with the feeder house opening on combine. These deflectors direct crop flow smoothly into the feeder house opening. This prevents crop from hitting and building up at the “wall” created by the faceplate at each side of the feeder house opening. (P. 41)
- ❑ Check that feeder draper is under draper seal at sides.
- ❑ Check feed draper tension. (P. 42)
- ❑ Ensure feeder pan and skid plate are properly assembled for your header/combine combination. (P. 43)
- ❑ Install linkage supports in header lower legs (972, 973 Headers Only). (P. 47)
- ❑ With the float arms sitting on the stops, set float adjustment to 50 lbs. (225 N) when lifting each crop divider for above ground cutting. Set float adjustment to 30 lbs. (135 N) when lifting each crop divider for cutting on the ground. (P. 18) [50 lbs. = approx 6 gal. water (22 L) / 30 lbs. = approx. 3 ½ gal. water (13L)]
- ❑ Check that rear of feeder draper moves up and down freely.
- ❑ Set center link to mid-range length of 19-1/4” (490 mm) pin-to-pin. Check that locking collar on mechanical center link is tight against tube. (P. 44)
- ❑ Move retracting tine drum to correct position for header and combine model. (P. 45)
- ❑ Check gearbox oil level. (P. 31)
- ❑ Loosen breather screw on hydraulic reservoir cap. (P. 17)
- ❑ Check hydraulic reservoir oil level. (P. 29)
- ❑ Set draper flow control to number 4. (The number at the top of the dial is the setting.) Run header drapers slowly for 5 minutes to fill hydraulic lines, then check oil level at adapter reservoir. (P. 17)
- ❑ Grease all bearings. (P. 26)

COMBINE:

- ❑ Position front drum down and forward.
- ❑ For optimal performance, remove bolt-on dust shields.
- ❑ Use feeder chain with aggressive (serrated) bars if available.
- ❑ Adjust face plate (if adjustable) to optimum angle. (P. 50)

Date Checked: _____ Checked by: _____